POLSKA AKADEMIA NAUK, INSTYTUT MATEMATYCZNY

DISSERTATIONES MATHEMATICAE

(ROZPRAWY MATEMATYCZNE)

CCCLVI

SHUTAO CHEN

Geometry of Orlicz spaces

WARSZAWA 1996

Shutao Chen
Department of Mathematics
Harbin Normal University
150080 Harbin, P.R. China

Published by the Institute of Mathematics, Polish Academy of Sciences
Typeset in TEX at the Institute
Printed and bound by
drukarnia
herman & herman
02-240 Warszawa, ul. Jakobinów 23, tel: 846-79-66, tel/fax: 49-89-95

P R I N T E D I N P O L A N D

ISSN 0012-3862

CONTENTS

1991 *Mathematics Subject Classification*: 46B20, 46E30.
Received 16.8.1994; revised 4.7.1995.

Preface

60 years ago, in 1932, there appeared both the famous book on functional analysis by S. Banach, *Théorie des opérations linéaires*, and the article on spaces, later called Orlicz spaces, by W. Orlicz, *Über eine gewisse Klasse von Räumen vom Typus B* in Bull. Internat. Acad. Polon. Sci. Sér. A. The latter notion was an important extension of the notion of L_p and l_p spaces, introduced by F. Riesz in 1910 and 1913, respectively. The investigations of geometric properties of Banach spaces, i.e., properties which are invariant with respect to linear isometries, date back to 1936, when J. A. Clarkson introduced the notion of uniformly rotund spaces in the paper *Uniformly convex spaces* in Trans. Amer. Math. Soc. 40, and it was shown that L_p with $1 < p < \infty$ are examples of such spaces. Between the two notions of uniform rotundity and rotundity of a Banach space, a number of intermediate geometric properties have recently been investigated. Applications were found in such seemingly distant branches of mathematics as approximation theory and probability theory. Now, the scale of L_p spaces seems to be too narrow in order to provide a good model for distinguishing subtleties connected with various geometric properties of Banach spaces. A much richer field of examples is obtained by considering Orlicz spaces L_M of functions and l_M of sequences, where M is an Orlicz function. Also, one distinguishes in Orlicz spaces two norms, the Orlicz norm $\|\cdot\|^o$ and the Luxemburg norm $\|\cdot\|$, which are equivalent, but the identity operator from $(L_M, \|\cdot\|^o)$ to $(L_M, \|\cdot\|)$ is not a linear isometry, which implies that from the point of view of geometric properties, these spaces differ essentially.

The importance of this book lies in the fact that it is the first book in English devoted to the problem of geometric properties of Orlicz spaces, and that it provides complete, up-to-date information in this domain. In most cases the theorems concern necessary and sufficient conditions for a given geometric property expressed by properties of the function M which generates the space L_M or l_M. Some applications to best approximation, predictors and optimal control problems are also discussed.

This book shows the great role played recently by the Harbin School of Functional Analysis in problems of geometric properties of Orlicz spaces. There are many results in this book which have so far been published only in Chinese.

Anyone interested in the domain of geometric properties of Banach spaces will certainly find the present book indispensable.

Poznań, September 1992 *Julian Musielak*

Introduction

Although the concept of Orlicz space was introduced by W. Orlicz early in 1932 and the book *Convex Functions and Orlicz Spaces* by M. A. Krasnosel'skiĭ and Ya. B. Rutitskiĭ appeared 30 years ago, it was not until the last ten years that the theory of geometry of Orlicz spaces was developed extensively. In 1986, the author, in collaboration with C. Wu, T. Wang and Y. Wang, published a book, *Theory of Geometry of Orlicz Spaces* (in Chinese), which collected the main results on geometry of Orlicz spaces as well as some applications obtained by that time. The author is pleased that the subject has made great advances in the very short time since the book was published. The fundamental theory, such as weak topology and isomorphic subspaces, has been perfected, and, at the same time, many geometric properties have been discussed more precisely, to the local behavior, to the pointwiseness. For instance, criteria for smooth points, uniformly rotund points, H points and uniformly non-l_n^1 or nonsquare points have all been obtained recently. Moreover, it is impressive that many open problems have been solved; for example, sufficient and necessary conditions for normal structure, uniformly normal structure, uniform rotundity in every direction have been found.

It is the aim of this book to collect those important results and to introduce the basic techniques as well as some special techniques to solve problems in Orlicz spaces. This book also includes most background material so that the reader can comprehend classical Orlicz spaces. This material is basically selected from the two books mentioned above and the book *Orlicz Spaces and their Applications* (in Chinese) by C. Wu and T. Wang, published in 1983.

This book can be used as a one-semester course for graduates. Mathematicians who are working on Banach space theory may also find this book useful.

The author would like to express his thanks to all mathematicians who have made contributions to this text. Particular thanks are due to C. Wu, T. Wang, Y. Wang, Z. Ren, H. Sun, J. Musielak, A. Kamińska, M. Wisła and R. Płuciennik who communicated their ample works with the author. The author feels deeply in debt to H. Hudzik who checked this whole book carefully and made numerous improvements.

Harbin, August 1992 *Shutao Chen*

1. Orlicz spaces

1.1. Orlicz functions

DEFINITION 1.1. A continuous function $M : \mathbb{R} \to \mathbb{R}$ is called *convex* if

$$M\left(\frac{u+v}{2}\right) \le \frac{M(u)+M(v)}{2} \tag{1.1}$$

for all $u, v \in \mathbb{R}$. If, in addition, the two sides of (1.1) are not equal for all $u \ne v$, then we call M *strictly convex*.

DEFINITION 1.2. A continuous function $M : \mathbb{R} \to \mathbb{R}$ is said to be *uniformly convex* if for any $\varepsilon > 0$ and any $u_0 > 0$, there exists some $\delta > 0$ such that

$$M\left(\frac{u+v}{2}\right) \le (1-\delta)\frac{M(u)+M(v)}{2} \tag{1.2}$$

for all $u, v \in \mathbb{R}$ satisfying $|u-v| \ge \varepsilon \max\{|u|, |v|\} \ge \varepsilon u_0$.

PROPOSITION 1.3. *Let $M : \mathbb{R} \to \mathbb{R}$ be a continuous function.*

(1) *The following are equivalent*:
  (a) *M is convex.*
  (b) *There exist affine functions $L_n(u) = a_n u + b_n$ such that $M(u) = \sup_n L_n(u)$.*
  (c) *For any $u, v \in \mathbb{R}$ and $\alpha \in [0,1]$,*

$$M(\alpha u + (1-\alpha)v) \le \alpha M(u) + (1-\alpha)M(v). \tag{1.3}$$

  (d) *For any $u_1, \ldots, u_n \in \mathbb{R}$ and $\alpha_i \ge 0$ with $\sum_{i=1}^n \alpha_i = 1$,*

$$M\Big(\sum_{i=1}^n \alpha_i u_i\Big) \le \sum_{i=1}^n \alpha_i M(u_i).$$

(2) *M is strictly convex iff for any $u \ne v$ and $\alpha \in (0,1)$, inequality* (1.3) *holds but the two sides are not equal.*

(3) *M is uniformly convex iff for any $\varepsilon > 0$ and $[a,b]$ contained in $(0,1)$, there exists $\delta > 0$ such that*

$$M(\alpha u + (1-\alpha)v) \le (1-\delta)[\alpha M(u) + (1-\alpha)M(v)] \tag{1.4}$$

for all $\alpha \in [a,b]$ and all $u, v \in \mathbb{R}$ satisfying $|u-v| \ge \varepsilon \max\{|u|, |v|\} \ge \varepsilon u_0$.

Proof. Exercise. ■

PROPOSITION 1.4. *Suppose that M is strictly convex.*

(1) *M is uniformly convex on any bounded interval.*

(2) *For any* $k > 0$, $\varepsilon > 0$, *there exists* $\delta > 0$ *such that* (1.2) *holds for all* $u, v \in \mathbb{R}$ *satisfying* $|u|, |v| \le K$ *and* $|u - v| \ge \varepsilon$.

(3) *For any* $k > 0$, $\varepsilon > 0$ *and* $[a, b] \subset (0, 1)$, *there exists* $\delta > 0$ *such that* (1.4) *holds for all* $\alpha \in [a, b]$ *and* $u, v \in \mathbb{R}$ *satisfying* $|u|, |v| \le K$ *and* $|u - v| \ge \varepsilon$.

Proof. An easy exercise. ■

DEFINITION 1.5. $M : \mathbb{R} \to \mathbb{R}$ is called an *Orlicz function* if it has the following properties:

(1) M is even, continuous, convex and $M(0) = 0$.
(2) $M(u) > 0$ for all $u \ne 0$.
(3) $\lim_{u\to 0} M(u)/u = 0$ and $\lim_{u\to\infty} M(u)/u = \infty$.

PROPOSITION 1.6. *M is an Orlicz function iff* $M(u) = \int_0^{|u|} p(t)\,dt$, *where the right derivative p of M satisfies*:

(1) *p is right-continuous and nondecreasing.*
(2) $p(t) > 0$ *whenever* $t > 0$.
(3) $p(0) = 0$ *and* $\lim_{t\to\infty} p(t) = \infty$.

Proof. Exercise. ■

From Proposition 1.6, we derive a useful inequality

$$\frac{1}{2}p\left(\frac{u}{2}\right) \le \frac{M(u)}{u} \le p(u) \qquad (u > 0). \tag{1.5}$$

By the convexity of M and $M(0) = 0$, we find

$$M(\alpha u) < \alpha M(u) \qquad (0 < \alpha < 1), \tag{1.6}$$

which yields

$$\frac{M(v)}{v} < \frac{M(u)}{u} \qquad (0 < v < u). \tag{1.7}$$

Let p satisfy (1)–(3) of Proposition 1.6. Then we call

$$q(s) = \sup\{t : p(t) \le s\} = \inf\{t : p(t) > s\}$$

the *right-inverse function* of p. Clearly, q also satisfies (1)–(3) of Proposition 1.6.

DEFINITION 1.7. Let M be an Orlicz function, p be the right derivative of M, and q be the right-inverse function of p. Then we call

$$N(v) = \int_0^{|v|} q(s)\,ds$$

the *complementary function* of M.

The relation between M, N, p, q is described as in the following graph.

From Graph 1.1, we see that

(1) M is strictly convex iff p is strictly increasing, i.e., q is continuous.
(2) (*Young Inequality*)

$$uv \le M(u) + N(v). \tag{1.8}$$

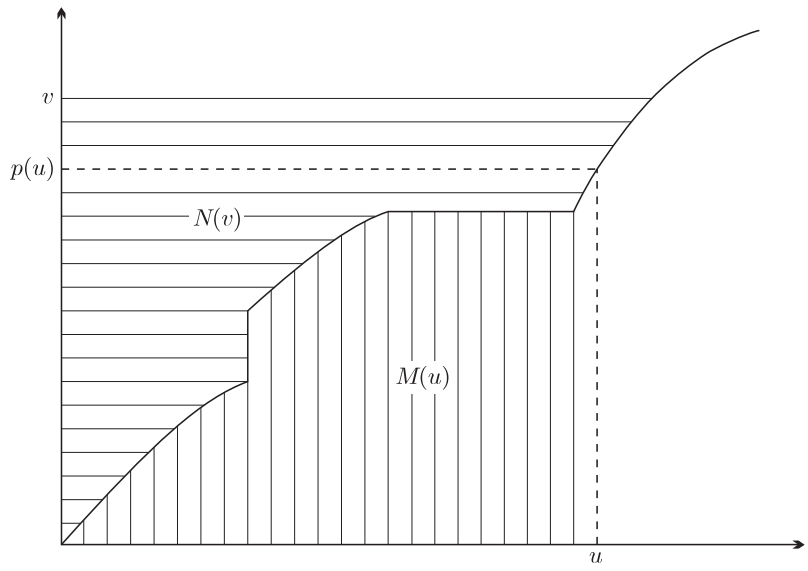

Graph 1.1

(3)

$$uv = M(u) + N(v) \Leftrightarrow u = q(|v|)\operatorname{sign} v \text{ or } v = p(|u|)\operatorname{sign} u. \tag{1.9}$$

(4) M and N are complementary to each other.

Example 1.8. Let M be an Orlicz function. Consider the complementary function N_1 of $M_1(u) = aM(bu)$ $(a, b > 0)$. Let p be the right derivative of M. Then the right derivative of M_1 is $p_1(t) = abp(bt)$, and so its right-inverse function is

$$q_1(s) = \frac{1}{b} q\left(\frac{1}{ab} s\right),$$

where q is the right derivative of N. Hence

$$N_1(v) = \int_0^{|v|} q_1(s)\, ds = \int_0^{|v|/(ab)} q(s)\, ds = aN\left(\frac{|v|}{ab}\right).$$

Example 1.9. Let N_1, N_2 be the complementary functions of M_1 and M_2 respectively. Suppose that

$$M_1(u) \le M_2(u) \qquad (u \ge u_0 \ge 0).$$

Consider the relation between N_1 and N_2. By (1.8) and (1.9),

$$M_2(q_2(v)) + N_2(v) = q_2(v)v \le M_1(q_2(v)) + N_1(v) \qquad (v \ge 0).$$

Hence by

$$M_2(q_2(v)) \ge M_1(q_2(v)) \qquad (q_2(v) \ge u_0),$$

we obtain

$$N_2(v) \le N_1(v) \qquad (q_2(v) \ge u_0).$$

If there exist $a, b > 0$ and $u_0 \geq 0$ such that

$$M_1(u) \leq aM_2(bu) \qquad (u \geq u_0),$$

then we write $M_1 \prec M_2$. If $M_1 \prec M_2$ and $M_2 \prec M_1$, then we say that M_1 and M_2 are *equivalent* (written $M_1 \sim M_2$).

By Examples 1.8 and 1.9, $M_1 \prec M_2 \Rightarrow N_2 \prec N_1$, whence $M_1 \sim M_2 \Rightarrow N_1 \sim N_2$.

EXAMPLE 1.10. Let $M_1(u) = \alpha^{-1}|u|^\alpha$ $(\alpha > 1)$. Then $p_1(t) = t^{\alpha-1}$ and $q_1(s) = s^{\beta-1}$ $(1/\alpha + 1/\beta = 1)$, and so $N_1(v) = \beta^{-1}|v|^\beta$.

EXAMPLE 1.11. Let $M_2(u) = e^{|u|} - |u| - 1$. Then $p_2(t) = e^t - 1$ and $q_2(s) = \ln(s+1)$, whence $N_2(v) = (1 + |v|)\ln(1 + |v|) - |v|$.

DEFINITION 1.12. We say that an Orlicz function M satisfies *condition* Δ_2 if there exist $K > 2$ and $u_0 \geq 0$ such that

$$M(2u) \leq KM(u) \qquad (u \geq u_0). \tag{1.10}$$

In this case, we write $M \in \Delta_2$ or $N \in \nabla_2$. If $M \in \Delta_2$ and $N \in \Delta_2$, then we write $M \in \Delta_2 \cap \nabla_2$.

Since condition Δ_2 plays a very important role in the theory of Orlicz spaces, we introduce some criteria of the condition for later application.

THEOREM 1.13. *The following are equivalent*:

(1) $M \in \Delta_2$.

(2) *There exist* $l > 1, u_0 > 0$, *and* $K > 1$ *such that*

$$M(lu) \leq KM(u) \qquad (u > u_0). \tag{1.11}$$

(3) *For any* $l_1 > 1$ *and* $u_1 > 0$, *there exists* $K' > 0$ *such that* (1.11) *holds for* $l = l_1$, $u_0 = u_1$ *and* $K = K'$.

(4) *For any* $l_2 > 1$ *and* $u_2 > 0$ *there exists* ε *in* $(0, 1)$ *such that*

$$M((1 + \varepsilon)u) \leq l_2 M(u) \qquad (u > u_2). \tag{1.12}$$

(5) *For any* $l_3 > 1$, *there exist* $v_0 > 0$ *and* $\delta > 0$ *such that*

$$N(l_3 v) \geq (l_3 + \delta)N(v) \qquad (v \geq v_0). \tag{1.13}$$

(6) *There exist* $l_3 > 1$, $v_0 > 0$, *and* $\delta > 0$ *such that* (1.13) *holds.*

Proof. (1)⇒(2). Trivial.

(2)⇒(3). Given $l_1 > 1$, choose an integer α such that $l^\alpha > l_1$. Then by (1.11),

$$M(l_1 u) \leq M(l^\alpha u) < K^\alpha M(u) \qquad (u \geq u_0).$$

Hence, if $u_1 \geq u_0$, then $K' = K^\alpha$ is a candidate. If $u_1 < u_0$, then we choose $K' = \max\{K^\alpha, K_0\}$, where

$$K_0 = \max\{M(l_1 u)/M(u) : u \in [u_1, u_0]\}.$$

(3)⇒(4). For $l_2 > l$ and $u_2 > 0$, by (3), there exists $K' > l_2$ such that

$$M(2u) \leq K'M(u) \qquad (u \geq u_2).$$

Take $\varepsilon = (l_2 - 1)/(K' - 1)$. Then $0 < \varepsilon < 1$ and by the convexity of M,

$$\begin{aligned} M((1+\varepsilon)u) &= M((1-\varepsilon)u + 2\varepsilon u) \le (1-\varepsilon)M(u) + \varepsilon M(2u) \\ &\le (1-\varepsilon)M(u) + \varepsilon K' M(u) = l_2 M(u) \qquad (u \ge u_2). \end{aligned}$$

(4)⇒(5). For any $l_3 > 1$ and $v_0 > 0$, choose $u_2 \in (0, q(v_0)]$. Then (1.12) and Examples 1.8 and 1.9 imply

$$N(v) \le \frac{1}{l_3} N\left(\frac{l_3}{1+\varepsilon} v\right) \qquad (v > v_0).$$

It follows that

$$l_3 N(v) \le N\left(\frac{l_3}{1+\varepsilon} v\right) \le \frac{1}{1+\varepsilon} N(l_3 v) \qquad (v \ge v_0).$$

Setting $\delta = l_3\varepsilon$, we obtain (1.13).

(5)⇒(6). Trivial.

(6)⇒(1). Let $\beta = (l_3 + \delta)/l_3$. Then (1.13) becomes

$$\frac{1}{\beta l_3} N(l_3 v) \ge N(v) \qquad (v \ge v_0).$$

Select an integer n such that $\beta^n \ge 2$ and let $K = \beta^n l_3^n$. Then by Examples 1.8 and 1.9,

$$M(2u) \le M(\beta^n u) \le \beta^n l_3^n M(u) = K M(u) \qquad (u \ge u_0). \ \blacksquare$$

Remark. Set $v = 0$ in (1.2). Condition (6) in Theorem 1.13 shows that uniformly convex Orlicz functions satisfy condition ∇_2.

In the geometrical theory of Orlicz spaces, the rotundity of Orlicz spaces relates to the convexity of generating Orlicz functions. In general, an Orlicz function may not be strictly convex, and even if it is, it may fail to be uniformly convex. However, we still have the following:

Lemma 1.14. *For any Orlicz function M and $\varepsilon > 0$, there exists a strictly convex Orlicz function M_1 such that*

$$M(u) \le M_1(u) \le (1+\varepsilon)M(u) \qquad (u \in \mathbb{R}).$$

Proof. If M is affine on an interval $[a, b]$ and it is not affine on either $[a - \delta, b]$ or $[a, b+\delta]$ for each $\delta > 0$, then we call $[a, b]$ a *structural affine interval* of M. Let $\{[a_k, b_k]\}_k$ be all structural affine intervals of M. Then p is a constant on each $[a_k, b_k)$. Now, we define a strictly increasing function $p_1(t)$ with $p(t) \le p_1(t) \le (1+\varepsilon)p(t)$. Consider $[a_1, b_1]$. If $p(b_1) > p(a_1)$, then we let $b_1 = b_1'$ and

$$\beta_1 = \min\{p(b_1), (1+\varepsilon)p(a_1)\}.$$

If $p(b_1) = p(a_1)$, then we choose $b_1' > b_1$ such that $p(b_1') < (1+\varepsilon)p(a_1)$. Since p is continuous at b_1 in this case, such a b_1' does exist. On the interval $[a_1, b_1')$, we define $p_1(t)$ to be affine and $p_1(a_1) = p(a_1)$, $\lim_{t \to b_1'-} p_1(t) = \beta_1$. Next, we choose the first interval $[a_{k(1)}, b_{k(1)}]$ in $\{[a_k, b_k]\}_k$ such that $[a_{k(1)}, b_{k(1)}] \setminus [a_1, b_1'] \ne \emptyset$ and define $p_1(t)$ on $[a_{k(1)}, b_{k(1)}')$ in the same way but $b_{k(1)} \le b_{k(1)}' \le a_1$ if $b_k' \le a_1$. And so on, by induction, $p_1(t)$ is defined on $\bigcup_k [a_k, b_k')$. Finally, we set $p_1(t) = p(t)$ elsewhere. Then $p_1(t)$ is a

candidate. We complete the proof by setting

$$M_1(u) = \int_0^{|u|} p_1(t)\,dt. \ \blacksquare$$

LEMMA 1.15. *For any Orlicz function M and any $\varepsilon > 0$, there exists an Orlicz function M_1 such that*

$$M(u) \le M_1(u) \le (1+\varepsilon)M(u)$$

and that its right derivative p_1 is continuous. Moreover, if M is strictly convex, then so is M_1.

Proof. Take $\varepsilon_n > 0$ such that $\sum_{n=1}^{\infty} \varepsilon_n \le \varepsilon$. Since p is monotone, its discontinuity points (b_n) are countable. Observing that p is defined only on $[0,\infty)$, p is right-continuous and $p(0) = 0$, we see that each b_n is positive.

Let $b_1' = b_1$. Choose $a_1 \in (0, b_1')$ such that

$$(b_1' - a_1)p(b_1') < \varepsilon_1 M(b_1')$$

and define p_1 on $[a_1, b_1']$ to be affine and

$$p_1(a_1) = p(a_1), \qquad p_1(b_1') = p(b_1').$$

Find the first point $b_2' \in \{b_n\} \setminus (a_1, b_1']$ and choose $a_2 \in (0, b_2) \setminus [a_1, b_1']$ such that

$$(b_2' - a_2)p(b_2') < \varepsilon_2 M(b_2').$$

Then define p_1 on $[a_2, b_2']$ to be affine and

$$p_1(a_2) = p(a_2), \qquad p_1(b_2') = p(b_2').$$

And so on, we have defined p_1 on $\bigcup_k [a_k, b_k']$ by induction. For other $t \ge 0$, we set $p_1(t) = p(t)$. Then clearly, $p_1(t) \ge p(t)$ is continuous and is strictly increasing if so is p. Moreover,

$$\begin{aligned} 0 \le M_1(u) - M(u) &= \int_0^{|u|} [p_1(t) - p(t)]\,dt = \sum_{b_k' \le |u|} \int_{a_k}^{b_k'} [p_1(t) - p(t)]\,dt \\ &\le \sum_{b_k' \le |u|} (b_k' - a_k)p_1(b_1') \le \sum_{b_k' \le |u|} \varepsilon_k M(b_k') \le \varepsilon M(u). \ \blacksquare \end{aligned}$$

Summing up Lemmas 1.14 and 1.15, we obtain

THEOREM 1.16. *For any Orlicz function M and $\varepsilon > 0$, there exists an Orlicz function M_1 such that*

$$M(u) \le M_1(u) \le (1-\varepsilon)M(u) \qquad (u \in \mathbb{R})$$

and both M_1 and its complementary function are strictly convex.

Now, we consider the case where $M \in \Delta_2 \cap \nabla_2$.

LEMMA 1.17. *If for each $\varepsilon > 0$, there exists $K > 1$ such that*

$$p((1+\varepsilon)t) \ge Kp(t) \qquad (t \ge 0),$$

then M is uniformly convex.

Proof. Given $\varepsilon \in (0,1)$, take $K > 1$ such that

$$p((1+\varepsilon/2)t) \ge Kp(t) \qquad (t \ge 0).$$

For any $u, v \in \mathbb{R}$ satisfying $|u-v| \ge \varepsilon \max\{|u|,|v|\}$, we shall show that (1.2) holds for $\delta = \varepsilon(1-1/K)/4 > 0$. Without loss of generality, we may assume that $u-v \ge \varepsilon u > \varepsilon v > 0$, i.e., $(1-\varepsilon)u \ge v > 0$. Define

$$\varphi(t) = M(u) + M(t) - 2M\left(\frac{u+t}{2}\right) \qquad (t \ge 0).$$

Then for almost all $t \in [0,u]$,

$$\varphi'(t) = p(t) - p\left(\frac{u+t}{2}\right) \le 0.$$

Hence, $\varphi(t)$ is nonincreasing on $[0,u]$. It follows that

$$\begin{aligned}
\varphi(v) &\ge M(u) + M((1-\varepsilon)u) - 2M((1-\varepsilon/2)u) = \int_{(1-\varepsilon/2)u}^{u} p(t)\,dt - \int_{(1-\varepsilon)u}^{(1-\varepsilon/2)u} p(t)\,dt \\
&= \int_{(1-\varepsilon/2)u}^{u} [p(t) - p(t-\varepsilon u/2)]\,dt \ge \int_{(1-\varepsilon/2)u}^{u} [p(t) - p((1-\varepsilon/2)t)]\,dt \\
&\ge \int_{(1-\varepsilon/2)u}^{u} (1-1/K)p(t)\,dt \ge (1-1/K)[M(u) - (1-\varepsilon/2)M(u)] \\
&> \frac{\varepsilon}{4}\left(1-\frac{1}{K}\right)[M(u)+M(v)],
\end{aligned}$$

i.e., (1.2) holds for $\delta = (\varepsilon/4)(1-1/K) > 0$. ∎

THEOREM 1.18. *If $M \in \Delta_2 \cap \nabla_2$, then there exists $M_1 \sim M$ such that both M_1 and its complementary function are uniformly convex.*

Proof. Choose $u_0 > 0, K > 2$ and $\delta > 0$ such that

$$(2+\delta)M(u) \le M(2u) \le KM(u) \qquad (u \ge u_0).$$

Since changing the value of M on $[0,u_0]$ does not affect the equivalence, we may assume that the above inequalities hold for all $u \in \mathbb{R}$. Let

$$M_0(u) = \int_0^{|u|} \frac{M(t)}{t}\,dt, \qquad M_1(u) = \int_0^{|u|} \frac{M_0(t)}{t}\,dt.$$

We claim that $M_0 \sim M_1 \sim M$. Indeed, by (1.5),

$$p(u) \ge \frac{M(u)}{u} \ge \frac{M(2u)}{Ku} \ge \frac{1}{K}p(u) \qquad (u > 0).$$

Integrating each term in the inequalities from zero to u, we get $KM(u) \ge KM_0(u) \ge M(u)$, i.e., $M \sim M_0$. Similarly, we have $M_0 \sim M_1$.

Next, we show that M_1 is uniformly convex. Since

$$K^{-1}M(u) \le M\left(\frac{u}{2}\right) = \int_0^{|u|/2} \frac{M(u/2)}{|u/2|}\,dt \le \int_{|u|/2}^{|u|} \frac{M(t)}{t}\,dt \le M_0(u)$$

$$= \int_0^{|u|/2} \frac{M(t)}{t}\,dt + \int_{|u|/2}^{|u|} \frac{M(t)}{t}\,dt$$
$$\le M\left(\frac{u}{2}\right) + \frac{M(u)}{2} \le \left(\frac{1}{2+\delta} + \frac{1}{2}\right)M(u) = \frac{1}{L}M(u),$$

where $L = \frac{4+2\delta}{4+\delta} > 1$, we obtain

$$L \le \frac{M(t)}{M_0(t)} = \frac{tM_0'(t)}{M_0(t)} \le K.$$

Dividing each term by $t > 0$ and integrating each term in t from u to θu, we have

$$\theta^L M_0(u) \le M_0(\theta u) \le \theta^K M_0(u) \qquad (\theta \ge 1, u \in \mathbb{R}).$$

Set $p_1(t) = M_1'(t) = M_0(t)/t$. It follows for any $\varepsilon > 0$ that

$$p_1((1+\varepsilon)u) = \frac{M_0((1+\varepsilon)u)}{(1+\varepsilon)u} \ge \frac{(1+\varepsilon)^L M_0(u)}{(1+\varepsilon)u}$$
$$= (1+\varepsilon)^{L-1} M_0(u)/u = (1+\varepsilon)^{L-1} p_1(u),$$

which means that M_1 is uniformly convex by Lemma 1.17.

Finally, we verify that the complementary function N_1 of M_1 is also uniformly convex. Let $N_1'(u) = q_1(u)$ and

$$q_1((1+\varepsilon)v) = \alpha(v) q_1(v) \qquad (v \ge 0).$$

Then $\alpha(v) > 1$ $(v > 0)$. Replacing v by $p_1(u)$, we get

$$(1+\varepsilon)p_1(u) = p_1(\alpha(v)u) = \frac{M_0(\alpha(v)u)}{\alpha(v)u} \le \frac{\alpha^K(v) M_0(u)}{\alpha(v)u} = \alpha^{K-1}(v) p_1(u).$$

Hence, $\alpha(v) \ge (1+\varepsilon)^{1/(K-1)}$, and so $q_1((1+\varepsilon)v) \ge (1+\varepsilon)^{1/(K-1)} q_1(v)$, i.e., N_1 is uniformly convex. ■

Remark. When we deal with Orlicz sequence spaces, instead of condition Δ_2, we need the following condition. We say an Orlicz function M satisfies *condition* Δ_2 *near zero* if there exist $u_0 > 0$ and $K > 2$ such that

$$M(2u) \le KM(u) \qquad (|u| \le u_0).$$

Whenever we mention Orlicz sequence spaces, $M \in \Delta_2$ means that M satisfies condition Δ_2 near zero.

In this case, we also need the following condition. An Orlicz function M is said to be *uniformly convex on* $[0, u_0]$ if for any $\varepsilon > 0$, there exists $\delta > 0$ such that

$$M\left(\frac{u+v}{2}\right) \le (1-\delta)\frac{M(u)+M(v)}{2}$$

for all $u, v \in [0, u_0]$ satisfying $|u - v| \ge \varepsilon \max\{|u|, |v|\}$.

1.2. Orlicz spaces. From now on, we always denote by (G, Σ, μ) the Lebesgue measure space in a Euclidean space with $0 < \mu G < \infty$, and by M, N a pair of Orlicz

functions complementary to each other. Moreover, for a measurable function u on G, we introduce its *modular* by

$$\varrho_M(u) = \int_G M(u(t))\,dt.$$

Then the *Orlicz space* L_M and its subspace E_M are defined as follows:

$$L_M = \{u : \varrho_M(\lambda u) < \infty \text{ for some } \lambda > 0\},$$
$$E_M = \{u : \varrho_M(\lambda u) < \infty \text{ for all } \lambda > 0\}.$$

Remark. If we change the set G to be $\mathbb{N} = \{1, 2, \ldots\}$ and regard μ as the counting measure on $2^{\mathbb{N}}$, then we get an Orlicz sequence space in the same way. In this case, we write l_M and h_M instead of L_M and E_M, respectively.

Example 1.19. Suppose $M \notin \Delta_2$. By (2) of Theorem 1.13, there exist $\alpha_k \uparrow \infty$ such that $M(\alpha_1) \geq \varepsilon/\mu F$ and

$$M((1 + 1/k)\alpha_k) > 2^k M(\alpha_k) \qquad (k \in \mathbb{N}),$$

where $\varepsilon > 0$, $F \in \Sigma$ with $\mu F > 0$ are given previously. Select a sequence $\{F_k\}$ of disjoint subsets of F such that

$$M(\alpha_k)\mu F_k = 2^{-k}\varepsilon \qquad (k \in \mathbb{N})$$

and define

$$u_n(t) = \sum_{k=n+1}^{\infty} M(\alpha_k)\mu F_k = 2^{-n}\varepsilon < \infty.$$

Then $u_n \in L_M$. But for any $l > 1$, let $n_0 \in \mathbb{N}$ satisfy $l \geq 1 + 1/n_0$. Then for all $n \geq n_0$,

$$\varrho_M(lu_n) > \sum_{k=n+1}^{\infty} M((1 + 1/k)\alpha_k)\mu F_k > \sum_{k=n+1}^{\infty} 2^k M(\alpha_k)\mu F_k = \sum_{k=n+1}^{\infty} \varepsilon = \infty,$$

which shows that $u_n \notin E_M$ $(n \in \mathbb{N})$.

Remark. From Example 1.19, it is easily deduced that $E_M = L_M \Leftrightarrow M \in \Delta_2$.

Theorem 1.20 (Jensen Inequality). *If* $\varrho_M(u) < \infty$, *then*

$$M\left(\frac{1}{\mu G}\int_G u(t)\,dt\right) \leq \frac{1}{\mu G}\int_G M(u(t))\,dt.$$

Proof. By Proposition 1.3 (1), there are $k_n, b_n \in \mathbb{R}$ such that $M(t) = \sup_n\{k_n t + b_n\}$. Hence

$$M\left(\frac{1}{\mu G}\int_G u(t)\,dt\right) = \sup_n\Big\{k_n \frac{1}{\mu G}\int_G [k_n u(t) + b_n]\,dt\Big\}$$
$$\leq \frac{1}{\mu G}\int_G \sup_n\{k_n u(t) + b_n\}\,dt = \frac{1}{\mu G}\int_G M(u(t))\,dt. \ \blacksquare$$

For each $u \in L_M$, let

$$\|u\|^o = \|u\|^o_M = \sup\Big\{\int_G u(t)v(t)\,dt : \varrho_N(v) \leq 1\Big\}.$$

Then it is easily verified that $(L_M, \|\cdot\|^o)$ and $(E_M, \|\cdot\|^o)$ are Banach spaces. We call $(L_M, \|\cdot\|^o)$ the *Orlicz space generated by the Orlicz function* M, and $\|\cdot\|^o$ the *Orlicz norm*.

THEOREM 1.21. *Suppose* $u \in L_M$.

(1) $\|u\|^o \le 1 \Rightarrow \varrho_N(p(|u|)) \le 1$.
(2) $\|u\|^o \le 1 \Rightarrow \varrho_M(u) \le \|u\|^o$.

Proof. (1) For each $n \in \mathbb{N}$, set

$$G(n) = \{t \in G : |u(t)| \le n\}, \qquad u_n(t) = u(t)\chi_{G(n)}(t). \tag{1.14}$$

Then $|u_n(t)| \uparrow |u(t)|$ implies $\|u_n\|^o \uparrow \|u\|^o$. If (1) is not true, then for all large n,

$$1 < \varrho_N(p(|u_n|)) < \infty.$$

It follows from (1.6) that

$$\varrho_N\left(\frac{p(|u_n|)}{\varrho_N(p(|u_n|))}\right) < \frac{1}{\varrho_N(p(|u_n|))}\varrho_N(p(|u_n|)) = 1.$$

Consequently, by (1.9), we find a contradiction:

$$\begin{aligned} 1 \ge \|u\|^o \ge \|u_n\|^o &\ge \int_G |u_n(t)| \frac{p(|u_n(t)|)}{\varrho_N(p(|u_n|))}\,dt \\ &= \frac{1}{\varrho_N(p(|u_n|))}[\varrho_M(u_n) + \varrho_N(p(|u_n|))] > 1. \end{aligned}$$

(2) It follows immediately from (1) and (1.9) that

$$\varrho_M(u) \le \int_G |u(t)| p(|u(t)|)\,dt \le \|u\|^o. \ \blacksquare$$

EXAMPLE 1.22 (The norm of characteristic functions). Let $E \in \Sigma$ and $\mu E > 0$. For each $v \in L_N$ and $\varrho_N(v) \le 1$, by the Jensen Inequality,

$$N\left(\frac{1}{\mu E}\int_E v(t)\,dt\right) \le \frac{1}{\mu E}\varrho_N(v) \le \frac{1}{\mu E}.$$

Therefore,

$$\|\chi_E\|^o = \sup\left\{\int_E v(t)\,dt : \varrho_N(v) \le 1\right\} \le N^{-1}\left(\frac{1}{\mu E}\right)\mu E.$$

On the other hand, observing that

$$\varrho_N\left(N^{-1}\left(\frac{1}{\mu E}\chi_E\right)\right) = \frac{1}{\mu E}\int_G \chi_E(t)\,dt = 1,$$

we obtain

$$\|\chi_E\|^o \ge \int_G N^{-1}\left(\frac{1}{\mu E}\chi_E(t)\right)\chi_E(t)\,dt = N^{-1}\left(\frac{1}{\mu E}\right)\mu E.$$

Thus,

$$\|\chi_E\|^o = N^{-1}\left(\frac{1}{\mu E}\right)\mu E.$$

Theorem 1.21 suggests that $\|x_n\|^o \to 0 \Rightarrow \varrho_M(x_n) \to 0$. Now, we consider the inverse implication.

THEOREM 1.23. *Convergences in norm and in modular are equivalent iff* $M \in \Delta_2$.

Proof. *Necessity.* If $M \notin \Delta_2$, then by Example 1.19, there exists u_n in L_M such that $\varrho_M(u_n) \to 0$ and $\varrho_M(2u_n) = \infty$. It follows from Theorem 1.21 that $\|2u_n\|^o > 1$.

Sufficiency. Let $M \in \Delta_2$ and $\varepsilon > 0$. Choose $u_0 > 0$ and $K > 1$ such that

$$M(u_0/\varepsilon)\mu G < \varepsilon, \quad M(u/\varepsilon) \le KM(u) \quad (u \ge u_0).$$

Suppose $x_n \in L_M$ and $\varrho_M(x_n) \to 0$. Then

$$\varrho_M(x_n/\varepsilon) \le M(u_0/\varepsilon)\mu G + K\int_G M(x_n(t))\,dt < \varepsilon + K\varrho_M(x_n) \to \varepsilon$$

and thus, by the Young Inequality,

$$\begin{aligned}\|\varepsilon^{-1}x_n\|^o &= \sup\left\{\int_G \varepsilon^{-1}x_n(t)v(t)\,dt : \varrho_N(v) \le 1\right\}\\ &\le \sup\{\varrho_N(v) + \varrho_M(x_n/\varepsilon) : \varrho_N(v) \le 1\} \le 1 + \varepsilon + K\varrho_M(x_n) \to 1 + \varepsilon.\end{aligned}$$

Since $\varepsilon > 0$ is arbitrary, we deduce that $\|x_n\|^o \to 0$. ∎

Now, we turn to the subspace E_M. Let D be the set of all bounded measurable functions on G. We shall show that $E_M = \overline{D}$.

LEMMA 1.24. *If* $\varrho_M(u) < \infty$, *then the distance* $d(u, D)$ *from* u *to* D *is no more than* 1.

Proof. For any $\varepsilon > 0$, choose $n \in \mathbb{N}$ such that $\varrho_M(u_n) > \varrho_M(u) - \varepsilon$, where u_n is defined as in (1.14). Since $u_n \in D$, the Young Inequality implies

$$d(u, D) \le \|u - u_n\|^o \le 1 + \varrho_M(u - u_n) = 1 + \varrho_M(u) - \varrho_M(u_n) < 1 + \varepsilon.$$

Therefore, $d(u, D) \le 1$ since $\varepsilon > 0$ is arbitrary. ∎

THEOREM 1.25. $E_M = \overline{D}$.

Proof. For any $u \in E_M$ and $k \ge 1$, we have $ku \in E_M$. Therefore, by Lemma 1.24, $d(ku, D) \le 1$ or $d(u, D) \le 1/k$. Since k is arbitrary, we find that $u \in \overline{D}$.

On the other hand, observing that D is contained in E_M and that E_M is a closed subspace of L_M, we find that $\overline{D}$ is contained in E_M. ∎

DEFINITION 1.26. If $u \in L_M$ and

$$\lim_{\mu E \to 0} \|u\chi_E\|^o = 0,$$

then u is called *norm absolutely continuous*.

THEOREM 1.27. *The following are equivalent*:

(1) $u \in E_M$.
(2) $\|u - u_n\|^o \to 0$ *as* $n \to \infty$, *where* u_n *is defined as in* (1.14).
(3) u *is norm absolutely continuous.*

Proof. (1)⇒(2). Given $\varepsilon > 0$, we have $\varrho_M(u/\varepsilon) < \infty$ since $u \in E_M$. It follows that $\varrho_M((u-u_n)/\varepsilon) \le 1$ when n is large enough. Hence, by the Young Inequality,

$$\|\varepsilon^{-1}(u-u_n)\|^o \le 1 + \varrho_M(\varepsilon^{-1}(u-u_n)) \le 2$$

for such $n \in \mathbb{N}$. This yields $\|u-u_n\|^o \to 0$ as $n \to \infty$ since ε is arbitrary.

(2)⇒(3). For any given $\varepsilon > 0$, choose $n \in \mathbb{N}$ such that $\|u-u_n\|^o < \varepsilon$. Since $u_n \in D$, we can find $\delta > 0$ such that $\mu E < \delta$ implies $\|u_n\chi_E\|^o < \varepsilon$. Hence, when $\mu E < \delta$,

$$\|u\chi_E\|^o \le \|(u-u_n)\chi_E\|^o + \|u_n\chi_E\|^o < 2\varepsilon.$$

(3)⇒(1). Under the notation in (1.14), we have $\mu(G \setminus G(n)) \to 0$. Therefore,

$$\|u-u_n\|^o = \|u\chi_{G\setminus G(n)}\|^o \to 0 \qquad (n \to \infty).$$

Since $u_n \in D$, $u \in \overline{D} = E_M$. ∎

Remarks. 1. By Theorems 1.25, 1.27 and the Lusin Theorem, it is easy to check that the set of all bounded continuous functions is dense in E_M. Thus, E_M is a separable Banach space. The reader will see in §1.8 that L_M is not separable if $M \notin \Delta_2$.

2. All the results in this section and the following six sections can be deduced for Orlicz sequence spaces.

1.3. Orlicz norm. Since the Orlicz norm does not rely on the generating function directly, we have to derive some formulae for the norm for later use. We begin with a lemma.

Lemma 1.28. *Suppose that two Orlicz functions M and M_1 satisfy*

$$b_1 M(a_1 u) \le M_1(u) \le b_2 M(a_2 u) \qquad (u \in \mathbb{R}),$$

where a_1, a_2, b_1, and b_2 are positive constants and $b_1 \le 1 \le b_2$. Then

$$a_1 b_1 \|x\|_M^o \le \|x\|_{M_1}^o \le a_2 b_2 \|x\|_M^o \qquad (x \in L_M).$$

Proof. Let N_1 be the complementary function of M_1. Then by Examples 1.8 and 1.9,

$$N\left(\frac{1}{a_1 b_1} v\right) \ge b_1 N\left(\frac{1}{a_1 b_1} v\right) \ge N_1(v) \ge b_2 N\left(\frac{1}{a_2 b_2} v\right) \ge N\left(\frac{1}{a_2 b_2} v\right).$$

Hence,

$$\begin{aligned}\|x\|_{M_1}^o &\le \sup\left\{\int_G x(t)v(t)\,dt : \varrho_N\left(\frac{1}{a_2 b_2} v\right) \le 1\right\}\\ &= \sup\left\{\int_G a_2 b_2 x(t)v(t)\,dt : \varrho_N(v) \le 1\right\} = a_2 b_2 \|x\|_M^o.\end{aligned}$$

Similarly, we have $\|x\|_M^o \ge a_1 b_1 \|x\|_M^o$. ∎

Theorem 1.29. *If there exists $k > 0$ such that*

$$\int_G N(p(|ku(t)|))\,dt = 1,$$

then

$$\|u\|^o = \int_G |u(t)|p(k|u(t)|)\,dt = \frac{1}{k}[1+\varrho_M(ku)].$$

Proof. The second equality follows immediately from (1.9). Now, we show the first one. By the assumption and the definition of $\|\cdot\|$, we immediately have

$$\|u\|^o \ge \int_G |u(t)|p(k|u(t)|)\,dt.$$

Conversely, by the Young Inequality and (1.9),

$$\begin{aligned}\|u\|^o &= \frac{1}{k}\sup\Big\{\int_G ku(t)v(t)\,dt : \varrho_N(v)\le 1\Big\} \le \frac{1}{k}[1+\varrho_M(ku)]\\ &= \frac{1}{k}[\varrho_N(p(k|u|))+\varrho_M(ku)] = \int_G |u(t)|p(k|u(t)|)\,dt. \ \blacksquare\end{aligned}$$

Remark. If $u\in E_M$ and p is continuous, a k as in Theorem 1.29 does exist. In general, we have

Theorem 1.30. *For any $u\in L_M$,*

$$\|u\|^o = \inf_{k>0}\frac{1}{k}[1+\varrho_M(ku)]. \tag{1.15}$$

Proof. For any $k>0$, by the Young Inequality, we always have

$$\|u\|^o = \frac{1}{k}\sup\Big\{\int_G ku(t)v(t)\,dt : \varrho_N(v)\le 1\Big\} \le \frac{1}{k}[1+\varrho_M(ku)].$$

Hence,

$$\|u\|^o \le \inf_{k>0}\frac{1}{k}[1+\varrho_M(ku)].$$

Conversely, for any $\varepsilon>0$, by Theorem 1.16, we can find an Orlicz function M_1 such that

$$M(\alpha)\le M_1(\alpha)\le(1+\varepsilon)M(\alpha)\qquad(\alpha\in\mathbb{R})$$

and that the complementary function N_1 of M_1 is strictly convex, i.e., its right derivative p_1 is continuous. Define u_n as in (1.14). Without loss of generality, we may assume that $u_n\ne 0$. It follows that there exist $k_n>0$ such that $\varrho_{N_1}(p_1(k_n|u_n|))=1$ and thus, by Theorem 1.29,

$$\|u\|^o_{M_1}\ge\|u_n\|^o_{M_1} = \frac{1}{k_n}[1+\varrho_{M_1}(k_nu_n)]\ge\frac{1}{k_n}[1+\varrho_M(k_nu_n)].$$

Since k_n is decreasing and $k_n>(\|u\|^o_{M_1})^{-1}$, it converges to some $k_0>0$. Letting $n\to\infty$ and applying the Fatou Lemma and Lemma 1.28, we have

$$(1+\varepsilon)\|u\|^o\ge\|u\|^o_{M_1}\ge\frac{1}{k_0}[1+\varrho_M(k_0u)]\ge\inf_{k>0}k^{-1}[1+\varrho_M(ku)].$$

Letting $\varepsilon\to 0$, we complete the proof. $\blacksquare$

An important question is the attainability of the "inf" in (1.15). The answer is positive. To show this, we introduce some notations first. Let

$$k^* = k^*(u) = \inf\{k>0 : \varrho_N(p(k|u|))\ge 1\},$$

$$k^{**} = k^{**}(u) = \sup\{k > 0 : \varrho_N(p(k|u|)) \le 1\}.$$

Clearly, for any $u \in L_M$, $u \ne 0$, we have $k^* \le k^{**}$, whence,

$$K(u) = K_M(u) = [k^*, k^{**}] \ne \emptyset.$$

THEOREM 1.31. *$k \in K(u)$ $(u \ne 0)$ iff*

$$\|u\|^o = k^{-1}[1 + \varrho_M(ku)]. \tag{1.16}$$

Proof. Let

$$L(k) = k^{-1}[1 + \varrho_M(ku)], \qquad \theta = \theta(u) = \inf\{\lambda > 0 : \varrho_M(u/\lambda) < \infty\}. \tag{1.17}$$

Then $L(k)$ is continuous on $(0, \theta^{-1})$. First, we show that $\varrho_M(k^{**}u) < \infty$, i.e., $L(k^{**}) < \infty$. In fact, for any $k \in (0, k^{**})$, by the definition of k^{**}, $\varrho_N(p(k|u|)) \le 1$. Hence, by (1.9),

$$L(k) \le k^{-1}\Big[1 + \int_G k|u(t)|p(k|u(t)|)\,dt\Big] \le k^{-1} + \|u\|^o.$$

Let $k \to k^{**}$. The Fatou Lemma implies that $L(k^{**}) \le 1/k^{**} + \|u\|^o < \infty$.

To complete the proof, we shall show that $L(k_0) = \inf_{k>0} L(k) \Leftrightarrow k_0 \in K(u)$ according to Theorem 1.30. For any $k_1, k_2 \in (0, \theta^{-1})$ $(k_1 > k_2)$, take u_n as in (1.14). Then by (1.8) and (1.9),

$$\varrho_M(k_1u_n) \ge \int_G k_1|u_n(t)|p(k_2|u_n(t)|)\,dt - \varrho_N(p(k_2|u_n|)),$$
$$\varrho_M(k_2u_n) = \int_G k_2|u_n(t)|p(k_2|u_n(t)|)\,dt - \varrho_N(p(k_2|u_n|)).$$

It follows that

$$\begin{aligned}
&\frac{1}{k_1}[1 + \varrho_M(k_1u_n)] - \frac{1}{k_2}[1 + \varrho_M(k_2u_n)] \\
&\quad = \frac{k_1 - k_2}{k_1k_2}\Big\{-1 + \frac{k_2}{k_1 - k_2}[\varrho_M(k_1u_n) - \varrho_M(k_2u_n)] - \varrho_M(k_2u_n)\Big\} \\
&\quad \ge \frac{k_1 - k_2}{k_1k_2}\Big\{-1 + \frac{k_2}{k_1 - k_2}\int_G (k_1 - k_2)|u_n(t)|p(k_2|u_n(t)|)\,dt - \varrho_M(k_2u_n)\Big\} \\
&\quad = \frac{k_1 - k_2}{k_1k_2}\{\varrho_N(p(k_2|u_n|)) - 1\}.
\end{aligned}$$

Letting $n \to \infty$, we obtain

$$L(k_1) - L(k_2) \ge \frac{k_1 - k_2}{k_1k_2}\{\varrho_N(p(k_2|u|)) - 1\}. \tag{1.18}$$

Similarly, if $0 < k_1 < k_2 < \theta^{-1}$, we can deduce that

$$L(k_1) - L(k_2) \ge \frac{k_1 - k_2}{k_1k_2}\{\varrho_N(p(k_1|u|)) - 1\}.$$

It follows from the definition of k^* and k^{**} that $k^{**} < k_2 < k_1 \le \theta^{-1}$ or $k^* > k_2 > k_1 > 0$ implies $L(k_1) > L(k_2)$. This means that $L(k)$ is strictly increasing on $(k^{**}, \theta^{-1}]$ and that it is strictly decreasing on $(0, k^*)$.

If $k_0 \in (k^*, k^{**})$, then the definition of k^* and k^{**} indicates that $\varrho_N(p(k_0|u|)) = 1$. Therefore, by Theorems 1.29 and 1.30, $L(k_0) = \|u\|^o = \inf\{L(k) : k > 0\}$. Moreover, by

the Fatou Lemma, we derive

$$L(k^{**}) = \lim_{k\to k^{**}-} L(k) = \inf\{L(k) : k > 0\},$$
$$L(k^{*}) = \lim_{k\to k^{*}+} L(k) = \inf\{L(k) : k > 0\}.$$

If $k^* = k^{**}$, then by the monotonicity of $L(k)$ and Fatou's Lemma, we also have $L(k^*) = \inf\{L(k) : k > 0\}$. ∎

REMARKS 1. Inequality (1.18) implies $\theta(u) < 1 \Rightarrow \varrho_N(p(|u|)) < \infty$.

2. From Theorem 1.31, we also have $\theta(u) \le 1/k^{**}(u)$ $(u \in L_M)$.

For the moment, we turn to the set-valued mapping $K(u)$.

A set-valued mapping $F : X \to 2^Y$ is *upper semicontinuous* if for any $x \in X$ and open set U containing $F(x)$, there exists a neighborhood V of x such that for all $y \in V$, we have $F(y) \subset U$. F is *lower semicontinuous* if for any $x \in X$, $x_n \to x$ and $y \in F(x)$, there exist $y_n \in F(x_n)$ such that $y_n \to y$. If F is both upper and lower semicontinuous, then we say that F is *continuous*.

PROPOSITION 1.32. *$K : L_M \setminus \{0\} \to 2^{\mathbb{R}}$ is upper semicontinuous.*

Proof. Let $x_n \to u \ne 0$, $k_n \in K(x_n)$ and $k_0 = \lim_n k_n$. We have to show that $k_0 \in K(u)$. First, we show that $0 < k_0 < \infty$. Indeed, since $\|x_n\|^o > 1/k_n$, we have $0 > \|u\|^o \ge 1/k_0$. If $k_0 = \lim_n k_n = \infty$, then from Definition 1.5 (3) and

$$\limsup_n k_n^{-1}\varrho_M(k_n x_n) \le \lim_n \|x_n\|^o = \|u\|^o,$$

we derive that $x_n(t) \xrightarrow{\mu} 0$. But $x_n \to u$ implies that $x_n(t) \xrightarrow{\mu} u(t) \ne 0$, a contradiction. Now, applying Fatou's Lemma, we obtain

$$k_0^{-1}[1 + \varrho_M(k_0 u)] \ge \|u\|^o = \lim_n \|x_n\|^o = \lim_n k_n^{-1}[1 + \varrho_M(k_n x_n)] \ge k_0^{-1}[1 + \varrho_M(k_0 u)]. \ ∎$$

Generally, $K(u)$ is not continuous. But by Proposition 1.32, if $K(u)$ is a single-valued mapping, then it is continuous.

PROPOSITION 1.33. *$K(u)$ is a single-valued mapping iff*

(1) *M is strictly convex on $[\pi, \infty)$ and*

(2) *for all $u \in (0, \pi), p(u) < N^{-1}(1/\mu G)$, where $\pi = q(N^{-1}(1/\mu G))$.*

Proof. Suppose that (1) and (2) hold but $k^*(u) < k^{**}(u)$ for some $u \ne 0$. Arbitrarily pick $k \in \operatorname{int} K(u)$. Then $\varrho_N(p(k|u|)) = 1$. Since by (1), p is strictly increasing on $[\pi, \infty)$, we find $k|u(t)| < \pi$ μ-a.e. on G, and so, by (2), for μ-a.e. $t \in G$,

$$p(k|u(t)|) < N^{-1}\left(\frac{1}{\mu G}\right),$$

which implies a contradiction: $\varrho_N(p(k|u(t)|)) < 1$.

Conversely, if (1) is not true, then p is a constant on some interval $[a, b] \subset [\pi, \infty)$. Since p is nondecreasing, we have $p(a) \ge p(\pi) \ge N^{-1}(1/\mu G)$, hence, $N(p(a))\mu G \ge 1$. Pick $F \in \Sigma$ such that $N(p(a))\mu F = 1$. Then $K(\chi_F)$ contains $[a, b]$, which shows that K is not single-valued at χ_F.

If (2) does not hold, then there exists $\alpha \in (0,\pi)$ such that $p(a) \ge N^{-1}(1/\mu G)$. Since for any $\beta \in (\alpha,\pi)$,

$$\beta < \pi = q\left(N^{-1}\left(\frac{1}{\mu G}\right)\right) = \sup\left\{s : p(s) \le N^{-1}\left(\frac{1}{\mu G}\right)\right\},$$

we infer that

$$p(\beta) \le N^{-1}\left(\frac{1}{\mu G}\right) \le p(a) \le p(\beta).$$

This means that p is a constant on (α,π). With the same method as in case (1), we can show that K is not single-valued. ■

COROLLARY 1.34. *K is a single-valued mapping if M is strictly convex.*

Now, we consider the boundedness of K.

THEOREM 1.35. (1) $\inf\{k : k \in K(x), \|x\|^o = 1\} > 1$ *iff* $M \in \Delta_2$.
(2) *The set* $Q = \bigcup\{K(x) : a \le \|x\|^o \le b\}$ *is bounded for each* $b \ge a > 0$ *iff* $M \in \nabla_2$.

Proof. (1) If $M \notin \Delta_2$, then by taking u_n as in Example 1.19, we have $\varrho_M(u_n) \to 0$ $(n \to \infty)$ and $\theta(u_n) = 1$. Hence, by Theorem 1.30,

$$\|u_n\|^o \le 1 + \varrho_M(u_n) \to 1.$$

But for any $k_n \in K(u_n/\|u_n\|^o)$, since

$$k_n = 1 + \varrho_M(k_n u_n/\|u_n\|^o) < \infty,$$

from $\theta(u_n) = 1$, we deduce that

$$k_n \le \|u_n\|^o \le 1 + \varrho_M(u_n) \to 1.$$

If $M \in \Delta_2$, then by Theorem 1.23, there exists $\delta > 0$ such that $\|x\|^o = 1$ implies $\varrho_M(x) \ge \delta$. Therefore, for any $x \in S(L_M)$ and any $k \in K(x)$, we have $k > 1$, and so,

$$k = 1 + \varrho_M(kx) > 1 + \varrho_M(x) \ge 1 + \delta.$$

(2) Suppose $M \in \nabla_2$. Let $u_0 = M^{-1}(1/(2\mu G))$. By Theorem 1.13 (5), there exists $\delta > 0$ satisfying

$$M(2u) \ge (2+\delta)M(u) \qquad (u \ge u_0).$$

Set $\beta = 1 + \delta/2 > 1$. The inequality becomes

$$M(2u) \ge 2\beta M(u) \qquad (u \ge u_0).$$

For given $b \ge a > 0$, we claim that $\frac{1}{a}2^{2+\log_\beta 8b/a}$ is an upper bound of Q. Indeed, if $a \le \|x\|^o \le b$, then by Theorem 1.30,

$$a \le \|x\|^o \le \frac{a}{2}\left[1 + \varrho_M\left(\frac{2}{a}x\right)\right],$$

which yields $\varrho_M(2a^{-1}x) \ge 1$. Hence,

$$\varrho_M\left(\frac{2}{a}x\chi_H\right) \ge \varrho_M\left(\frac{2}{a}x\right) - M(u_0)\mu G \ge \frac{1}{2},$$

where $H = \{t \in G : 2a^{-1}|x(t)| \ge u_0\}$.

For any $k \in K(x)$, if $k > 4/a$, then there exists an integer $i \geq 1$ such that $2^i < 2^{-1}ak \leq 2^{i+1}$. To complete the "if" part, it suffices to show $\beta^i \leq 8b/a$. Since

$$M(2^i u) \geq 2^i \beta^i M(u) \qquad (u \geq u_0),$$

we have

$$\begin{aligned} b \geq \|x\|^o = k^{-1}[1 + \varrho_M(kx)] &\geq \int_H k^{-1} M(2^{-1}ak2a^{-1}x(t))\,dt \\ &\geq \int_H k^{-1}\beta^i 2^i M(2a^{-1}x(t))\,dt \geq k^{-1}\beta^i 2^{i-1} \geq 8^{-1}a\beta^i, \end{aligned}$$

i.e., $\beta^i \leq 8b/a$.

Next, we assume $M \notin \nabla_2$. By Theorem 1.13 (6), there exist $l_n \uparrow \infty$ and $u_n \uparrow \infty$ such that $l_1 > 2^2$, $u_n \geq M^{-1}(1/(2\mu G))$ and that

$$M(l_n u_n) < (1 + 1/n) l_n M(u_n) \qquad (n \in \mathbb{N}).$$

For each $n \in \mathbb{N}$, pick $G_n \in \Sigma$ such that $M(u_n)\mu G_n = 1/2$ and define $x_n(t) = u_n \chi_{G_n}(t)$. Then by Theorems 1.21 and 1.30,

$$\begin{aligned} 2^{-1} = \varrho_M(x_n) \leq \|x_n\|^o \leq l_n^{-1}[1 + \varrho_M(l_n x_n)] &= l_n^{-1} + l_n^{-1} M(l_n u_n)\mu G_n \\ &< l_n^{-1} + l_n^{-1}(1 + n^{-1}) l_n M(u_n)\mu G_n = l_n^{-1} + 2^{-1}(1 + n^{-1}) \to 2^{-1}. \end{aligned}$$

If $k_n \in K(x_n)$, then since $\|x_n\|^o < 1$ $(n \geq 2)$, we have $k_n > 1$ (thanks to Theorem 1.31). Hence,

$$\begin{aligned} \frac{1}{l_n} + \frac{1}{2}\left(1 + \frac{1}{n}\right) > \|x_n\|^o &= \frac{1}{k_n} + \frac{1}{k_n} M(k_n u_n)\mu G_n \\ &> 1/k_n + M(u_n)\mu G_n = 1/k_n + 1/2 \qquad (n \geq 2). \end{aligned}$$

Letting $n \to \infty$, we obtain $k_n \to \infty$. ∎

Remark. By Theorem 1.31, it is easy to verify

$$K(\alpha u) = \alpha^{-1} K(u) \quad (\alpha > 0, u \neq 0) \quad \text{and} \quad k^*(u) > 1/\|u\|^o \to \infty \qquad (u \to 0). \tag{1.19}$$

Furthermore, (1.19) implies $k^{**}(\alpha u) \to 0$ as $\alpha \to \infty$. But in general, $u_n \to \infty$ does not imply $k^*(u_n) \to 0$.

Theorem 1.36. *If (and only if) $M \in \nabla_2$, we have*

$$\|u_n\|^o \to \infty \Rightarrow k^{**}(u_n) \to 0.$$

Proof. If $M \in \nabla_2$ and $u_n \to \infty$, then $\bigcup_n K(u_n/\|u_n\|^o)$ is bounded by Theorem 1.35, and so, by (1.19),

$$k^{**}(u_n) \in \frac{1}{\|u_n\|^o} K\left(\frac{u_n}{\|u_n\|^o}\right) \to 0.$$

If $M \notin \nabla_2$, then by taking x_n as in the proof of Theorem 1.35, we have $\|x_n\|^o \to 1/2$ and $k_n = k^*(x_n) \to \infty$. Hence, by (1.19),

$$k^*(k_n^{1/2} x_n) = k_n^{-1/2} k^*(x_n) = k_n^{1/2} \to \infty$$

and $\|k_n^{1/2} x_n\|^o \to \infty$. ∎

Remark. Let

$$K_M = \sup\{k \in K(x) : \|x\|^o = 1\}, \qquad k_M = \inf\{k \in K(x) : \|x\|^o = 1\}.$$

T. Wang & Q. Wang [256] proved that

$$K_M = \sup\Big\{\sum_{i=1}^n m_i u_i p(u_i) : \sum_{i=1}^n m_i \le \mu G,\ \sum_{i=1}^n m_i N(p(u_i)) = 1, n \in \mathbb{N}\Big\},$$
$$k_M = \inf\Big\{\sum_{i=1}^n m_i u_i p(u_i) : \sum_{i=1}^n m_i \le \mu G,\ \sum_{i=1}^n m_i N(p(u_i)) = 1, n \in \mathbb{N}\Big\}.$$

Applying these formulas, we can prove an interesting result that M is a power function iff $K_M = k_M$. In fact, if M is a power function, then

$$(*) \qquad C = \frac{up(u)}{M(u)} = \frac{M(u) + N(p(u))}{M(u)} = 1 + \frac{N(p(u))}{M(u)}$$

for some $C > 1$. For any $u_i > 0$ and $m_i > 0$ with $\sum m_i \le \mu G$ and $\sum m_i N(p(u_i)) = 1$, by $(*)$ and (1.9),

$$\begin{aligned}\sum m_i u_i p(u_i) &= C \sum m_i M(u_i) = C \sum m_i u_i p(u_i) - C \sum m_i N(p(u_i)) \\ &= C \sum m_i u_i p(u_i) - C.\end{aligned}$$

This shows $\sum m_i u_i p(u_i) = C/(C-1)$, and hence, $K_M = k_M = C/(C-1)$.

Next, we assume $K_M = k_M = h$. For any $0 < \varepsilon < 1$, pick $u_0 > 0$ such that

$$N(p(u_0))\mu G > 2(1-\varepsilon)$$

and let $m_0 < \mu G/2$ satisfy $m_0 N(p(u_0)) = 1 - \varepsilon$. Then for each u with $N(p(u))\mu G > 2\varepsilon$, we can choose $m < \mu G/2$ such that $mN(p(u)) = \varepsilon$. Therefore,

$$h = mup(u) + m_0 u_0 p(u_0) = mM(u) + m_0 M(u_0) + 1,$$

and hence,

$$\frac{up(u)}{M(u)} = \frac{mup(u)}{mM(u)} = \frac{h - m_0 u_0 p(u_0)}{h - m_0 M(u_0) - 1}.$$

This means that $M(u)$ is a power function for u satisfying $N(p(u))\mu G > 2\varepsilon$. Since $\varepsilon > 0$ is arbitrary, $M(u)$ is a power function for all $u > 0$.

1.4. Luxemburg norm

Definition 1.37. For an Orlicz space L_M, we call the functional

$$\|u\| = \|u\|_M = \inf\{\lambda > 0 : \varrho_M(u/\lambda) \le 1\} \qquad (u \in L_M)$$

the *Luxemburg norm*.

We leave the verification that $\|\cdot\|$ is a norm on L_M to the reader.

Theorem 1.38. *Let $u \in L_M$ and $v \in L_N$.*

(1) $\|u\| \le 1 \Rightarrow \varrho_M(u) \le \|u\|$.
(2) $\|u\| > 1 \Rightarrow \varrho_M(u) > \|u\|$.

(3) (*Hölder Inequality*)

$$\langle u, v\rangle = \int_G u(t)v(t)\,dt \le \|u\|_M^o \|v\|_N.$$

(4) $\|u\| < \|u\|^o \le 2\|u\|$ $(u \ne 0)$.

Proof. (1) For any $u \in L_M$, we may assume $u \ne 0$. By the definition of $\|\cdot\|$, there exist $\lambda_n \downarrow \|u\|$ such that $\varrho_M(u/\lambda_n) \le 1$, and so Levy's Theorem ensures that $\varrho_M(u/\|u\|) \le 1$. Therefore, by (1.6),

$$1 \ge \varrho_M\left(\frac{u}{\|u\|}\right) \ge \frac{\varrho_M(u)}{\|u\|}.$$

(2) If $\|u\| > 1$, then for all small $\varepsilon > 0$,

$$1 < \varrho_M\left(\frac{u}{(1-\varepsilon)\|u\|}\right) \le \frac{\varrho_M(u)}{(1-\varepsilon)\|u\|}.$$

Letting $\varepsilon \to 0$, we obtain (2).

(3) From (1), we infer that $\|u\|_M^o \ge \langle u, v/\|v\|_N\rangle$ $(v \ne 0)$. This is (3).

(4) By Theorem 1.30 and (1), we immediately have

$$\left\|\frac{u}{\|u\|}\right\|^o \le 1 + \varrho_M\left(\frac{u}{\|u\|}\right) \le 2 \qquad (u \ne 0),$$

i.e., $\|u\|^o \le 2\|u\|$ $(u \in L_M)$. On the other hand, Theorem 1.21(2) shows that $\varrho_M(u/\|u\|^o) \le 1$, i.e., $\|u\| \le \|u\|^o$.

Finally, if $\|u\| = \|u\|^o = 1$ for some $u \in L_M$, then for any fixed $k \in K(u)$, we have $k > 1$. Hence, for any $\varepsilon \in (0, 1-1/k)$, we have $k(1-\varepsilon) > 1$ and $\varrho_M(u/(1-\varepsilon)) > 1$, and thus,

$$\begin{aligned} 1 = \|u\|^o &= \frac{1}{k}\left[1 + \varrho_M\left(\frac{(1-\varepsilon)ku}{1-\varepsilon}\right)\right] \\ &\ge \frac{1}{k}\left[1 + (1-\varepsilon)k\varrho_M\left(\frac{u}{1-\varepsilon}\right)\right] > \frac{1}{k}[1 + (1-\varepsilon)k] = \frac{1}{k} + 1 - \varepsilon. \end{aligned}$$

This is impossible if $\varepsilon \le 1/k$. ∎

THEOREM 1.39. *Suppose $M \in \Delta_2$ and $u_n, u \in L_M$.*

(1) $\varrho_M(u_n) \to \infty \Rightarrow \|u_n\| \to \infty$.

(2) $\|u\| = 1 \Rightarrow \varrho_M(u) = 1$.

(3) *For any $\varepsilon > 0$, there exists $\delta > 0$ such that*

$$\|u\| \ge \varepsilon \Rightarrow \varrho_M(u) \ge \delta.$$

(4) *For any $\varepsilon \in (0,1)$, there exists $\delta \in (0,1)$ such that*

$$\varrho_M(u) \le 1 - \varepsilon \Rightarrow \|u\| \le 1 - \delta.$$

(5) *For any $\varepsilon \in (0,1)$, there exists $\delta \in (0,1)$ such that*

$$\varrho_M(u) > 1 + \varepsilon \Rightarrow \|u\| \ge 1 + \delta.$$

Proof. (1) Suppose that $M \in \Delta_2$ and $L > 0$. Choose $u_0 \ge 0$ and $K \ge 1$ such that

$$M(Lu) \le KM(u) \qquad (u \ge u_0).$$

Then $\|u\| \le L$ implies $\varrho_M(u/L) \le 1$ and so,

$$\begin{aligned}\varrho_M(u) &= \varrho_M(u\chi_H) + \varrho_M(u\chi_{G/H})\\ &\le M(u_0)\mu G + K\varrho_M(L^{-1}u\chi_{G\setminus H}) \le M(u_0)\mu G + K,\end{aligned}$$

where $H = \{t \in G : |u(t)| \le u_0\}$.

(2) follows from the fact that $\varrho_M(u/k)$ is a continuous function of k on $(0,\infty)$ since $u \in L_M = E_M$.

(3) is an immediate consequence of Theorems 1.23 and 1.38 (4).

If (4) does not hold, then there exist $\varepsilon > 0$ and $u_n \in L_M$ such that $\varrho_M(u_n) < 1-\varepsilon$ and $1/2 \le \|u_n\| \uparrow 1$. Since $1 \ge 1/\|u_n\| - 1 \equiv a_n \downarrow 0$ and $L = \sup_n\{\varrho_M(2u_n)\} < \infty$ by (1), we have

$$\begin{aligned}1 &= \varrho_M(u_n/\|u_n\|) = \varrho_M(2a_nu_n + (1-a_n)u_n)\\ &\le a_n\varrho_M(2u_n) + (1-a_n)\varrho_M(u_n) \le a_nL + (1-\varepsilon) \to 1-\varepsilon,\end{aligned}$$

a contradiction.

(5) is verified similarly to (4). ∎

Now, we present a very useful lemma.

LEMMA 1.40. *Assume $M \in \Delta_2$. Then for any $L > 0$, and $\varepsilon > 0$, there exists $\delta > 0$ such that*

$$\varrho_M(u) \le L,\ \varrho_M(v) \le \delta \Rightarrow |\varrho_M(u+v) - \varrho_M(u)| < \varepsilon. \tag{1.20}$$

Proof. Let

$$h = \sup\{\varrho_M(2u+2v) : \varrho_M(u) \le L,\ \varrho_N(v) \le 1\}.$$

Then $L < h < \infty$ since $M \in \Delta_2$. Without loss of generality, we may assume $L > 1$ and $\varepsilon < 1$. Set $\beta = \varepsilon/h$. By Theorem 1.39, there exists $\delta > 0$ such that $\varrho_M(v) \le \delta$ implies $\|v\| \le \min\{\beta/2, \varepsilon/2\}$. Hence, if $\varrho_M(u) \le L$ and $\varrho_N(v) \le \delta$, then

$$\begin{aligned}\varrho_M(u+v) &= \varrho_M((1-\beta)u + \beta(u+v/\beta)) \le (1-\beta)\varrho_M(u) + \beta\varrho_M(u+v/\beta)\\ &\le (1-\beta)\varrho_M(u) + 2^{-1}\beta[\varrho_M(2u) + \varrho_M(2v/\beta)]\\ &\le \varrho_M(u) + \beta h/2 + \|v\| \le \varrho_M(u) + \varepsilon.\end{aligned}$$

Replacing u, v by $u+v, -v$ respectively in the above inequalities, we also have

$$\varrho_M(u) = \varrho_M(u+v) + (-v)) \le \varrho_M((u+v)) + \varepsilon. \ ∎$$

The following theorem shows that under the condition $M \in \Delta_2$, the convergences in norm and in measure coincide on the unit sphere of $(L_M, \|\cdot\|)$.

THEOREM 1.41. *Assume $u_n, u \in L_M$. Then*

$$\varrho_M(u_n) \to \varrho_M(u) \text{ and } u_n(t) \xrightarrow{\mu} u(t) \Rightarrow \varrho_M\left(\frac{u_n - u}{2}\right) \to 0.$$

Hence, if in addition, $M \in \Delta_2$, then by Theorem 1.39, $\|u_n - u\| \to 0$.

Proof. Suppose that $\varrho_M(u_n) \to \varrho_M(u)$ and $u_n(t) \xrightarrow{\mu} u(t)$. Since every subsequence of $\{u_n\}$ has a subsequence convergent to u μ-a.e., without loss of generality, we may

assume $u_n(t) \to u(t)$ μ-a.e. on G. By the convexity of M, we have

$$\frac{M(u(t)) + M(u_n(t))}{2} - M\left(\frac{u(t) - u_n(t)}{2}\right) \geq 0$$

for all $t \in G$. Therefore, by the Fatou Lemma,

$$\begin{aligned}\varrho_M(u) &= \int_G \lim_n \left[\frac{M(u(t)) + M(u_n(t))}{2} - M\left(\frac{u(t) - u_n(t)}{2}\right)\right] dt \\ &\leq \liminf_n \int_G \left[\frac{M(u(t) + M(u_n(t))}{2} - M\left(\frac{u(t) - u_n(t)}{2}\right)\right] dt \\ &= \varrho_M(u) - \limsup_n \varrho_M\left(\frac{u - u_n}{2}\right),\end{aligned}$$

which implies $\varrho_M((u - u_n)/2) \to 0$. ∎

The following proposition corresponds to Lemma 1.28.

PROPOSITION 1.42. *Under the condition of Lemma* 1.28, *we have*

$$b_1 a_1 \|u\|_M \leq \|u\|_{M_1} \leq b_2 a_2 \|u\|_M.$$

Proof. An easy exercise. ∎

Before ending this section, we discuss the relation between the distance from $u \in L_M$ to E_M and the functional

$$\theta = \theta(u) = \inf\{\lambda > 0 : \varrho_M(u/\lambda) < \infty\}.$$

THEOREM 1.43. *For any* $u \in L_M$,

$$\lim_n \|u - u_n\| = \lim_n \|u - u_n\|^o = \theta(u),$$

where u_n *is defined as in* (1.14).

Proof. If $u \in E_M$, then each term in the theorem is zero. Now, let $u \in L_M \setminus E_M$, i.e., $\theta(u) > 0$. Since $\|u - u_n\|$ and $\|u - u_n\|^o$ are monotone as $n \uparrow \infty$, the two limits in the theorem exist. For any $\varepsilon \in (0, \theta)$, we have

$$\varrho_M\left(\frac{u}{\theta - \varepsilon}\right) = \infty, \quad \text{i.e.,} \quad \varrho_M\left(\frac{u - u_n}{\theta - \varepsilon}\right) = \infty \quad (n \in \mathbb{N}),$$

and hence, $\|u - u_n\| \geq \theta - \varepsilon$. This implies

$$\lim_n \|u - u_n\|^o \geq \lim_n \|u - u_n\| \geq \theta(u).$$

It remains to show that $\lim_n \|u - u_n\|^o \leq \theta$. For this purpose, let $\varepsilon > 0$ be arbitrary. Then

$$\varrho_M\left(\frac{u}{\theta + \varepsilon}\right) < \infty, \quad \text{i.e.,} \quad \lim_n \varrho_M\left(\frac{u - u_n}{\theta + \varepsilon}\right) = 0.$$

It follows from Theorem 1.30 that

$$\|u - u_n\|^o \leq (\theta + \varepsilon)\left[1 + \varrho_M\left(\frac{u - u_n}{\theta + \varepsilon}\right)\right] \to \theta + \varepsilon.$$

Thus, $\lim_n \|u - u_n\|^o \leq \theta(u)$. ∎

THEOREM 1.44. *For any $u \in L_M$, $d(u) = d^o(u) = \theta(u)$, where*

$$d(u) = \inf\{\|u - w\| : w \in E_M\}, \qquad d^o(u) = \inf\{\|u - w\|^o : w \in E_M\}.$$

Proof. We only need to consider the case $u \in L_M \setminus E_M$. Since by Theorem 1.43,

$$\theta(u) = \lim_n \|u - u_n\|^o \ge d^o(u) \ge d(u),$$

it suffices to show $d(u) \ge \theta(u)$. Let $0 < \varepsilon < \theta/2$ and $w \in D$. Set $h = \sup\{|w(t)| < \infty : t \in G\}$, find $a > 0$ such that

$$\frac{1-a}{\theta - 2\varepsilon} > \frac{1}{\theta - \varepsilon},$$

and define $F_n = \{t \in G : |u(t)| \ge n\}$. Then

$$|u(t) - w(t)| > (1-a)|u(t)| \qquad (t \in F_n,\ n > h/a).$$

It follows that

$$\begin{aligned}\varrho_M\left(\frac{u-w}{\theta - 2\varepsilon}\right) &\ge \varrho_M\left(\frac{u-w}{\theta - 2\varepsilon}\chi_{F_n}\right) \ge \varrho_M\left(\frac{1-a}{\theta - 2\varepsilon}u\chi_{F_n}\right)\\ &\ge \varrho_M\left(\frac{u}{\theta - \varepsilon}\chi_{F_n}\right) = \infty > 1,\end{aligned}$$

which means $\|u - w\| \ge \theta - 2\varepsilon$. Since $\overline{D} = E_M$ and $w \in D$, $\varepsilon > 0$ are arbitrary, the proof is complete. ∎

1.5. Bounded linear functionals. For convenience, from now on, we write

$$L_M^o = (L_M, \|\cdot\|^o), \quad L_M = (L_M, \|\cdot\|), \quad E_M^o = (E_M, \|\cdot\|^o), \quad E_M = (E_M, \|\cdot\|).$$

THEOREM 1.45. *$(E_M^o)^* = L_N$ and $E_M^* = L_N^o$ in the sense that for any $f \in (E_M^o)^*$ (resp. $f \in (E_M)^*$), there is a unique $v \in L_N$ such that*

$$f(u) = \langle v, u\rangle = \int_G u(t)v(t)\,dt \qquad (u \in E_M) \tag{1.21}$$

and the mapping $f \mapsto v$ is isometric from $(E_M^o)^*$ onto L_N (resp. from $(E_M)^*$ onto L_N).

Proof. For each $v \in L_N$, (1.21) clearly defines a linear functional on E_M, and the Hölder Inequality gives

$$|\langle v, u\rangle| \le \|u\|^o \|v\|_N.$$

Conversely, let $f \in (E_M^o)^*$. For each $E \in \Sigma$, define $F(E) = f(\chi_E)$. Then F is an additive set function. We claim that it is absolutely continuous. Indeed, for any $\varepsilon > 0$, set $\delta = M(1/\varepsilon)^{-1}$. Then

$$\mu E < \delta \Rightarrow \varrho_M\left(\frac{1}{\varepsilon}\chi E\right) = M\left(\frac{1}{\varepsilon}\right)\mu E < \delta M\left(\frac{1}{\varepsilon}\right) = 1,$$

i.e., $\|\chi_E\| \le \varepsilon$. It follows that $|F(E)| = |f(\chi_E)| \le \|f\| \cdot \|\chi_E\|^o \le 2\varepsilon\|f\|$, which shows that F is absolutely continuous.

By the Radon–Nikodym Theorem, there exists a measurable function $v(t)$ on G such that

$$F(E) = \int_E v(t)\,dt \qquad (E \in \Sigma).$$

Hence, for every simple function $u \in E_M$,

$$f(u) = \int_G u(t)v(t)\,dt. \tag{1.22}$$

Since the set of simple functions is dense in E_M, (1.22) holds true for all $u \in E_M$, and moreover, the Hölder Inequality shows $\|f\| \le \|v\|_N$.

We need to show $\|f\| \ge \|v\|_N$. Let

$$F_n = \{t \in G : |v(t)| \le n\}, \quad v_n(t) = v(t)\chi_{F_n}(t) \quad (n \in \mathbb{N}).$$

Then by (1.22), (1.9) and Theorem 1.30,

$$\begin{aligned}\left\|q\left(\frac{v_n}{\|f\|}\right)\right\|^o &\ge \left\langle \frac{|f|}{\|f\|}, q\left(\frac{|v_n|}{\|f\|}\right)\right\rangle = \left\langle q\left(\frac{|v_n|}{\|f\|}\right), \frac{|v_n|}{\|f\|}\right\rangle \\ &= \varrho_M\left(q\left(\frac{v_n}{\|f\|}\right)\right) + 1 + \varrho_N\left(\frac{v_n}{\|f\|}\right) - 1 \\ &\ge \left\|q\left(\frac{v_n}{\|f\|}\right)\right\|^o + \varrho_N\left(\frac{v_n}{\|f\|}\right) - 1,\end{aligned}$$

i.e., $\varrho_N(v_n/\|f\|) \le 1$. Letting $n \to \infty$, we have $\varrho_N(v/\|f\|) \le 1$, or $\|v\|_N \le \|f\|$. Similarly, we can prove $E_M^* = L_N^o$. ∎

COROLLARY 1.46. *L_M is reflexive iff $M \in \Delta_2 \cap \nabla_2$.*

Proof. The condition is sufficient by Theorem 1.45. On the other hand, if L_M is reflexive, then so is E_M. Hence from

$$L_M = L_M^{**} \supset E_M^{**} = (L_N^o)^* \supset (E_N^o)^* = L_M,$$

we deduce $L_M = E_M$, i,e., $M \in \Delta_2$. Analogously,we have $M \in \nabla_2$. ∎

We say that $\varphi \in L_M^*$ is a *singular functional*, or simply, $\varphi \in F$, if $\varphi(E_M) = \{0\}$.

THEOREM 1.47. *Any $f \in L_M^*$ has a unique decomposition*

$$f = v + \varphi \qquad (v \in L_N,\ \varphi \in F). \tag{1.23}$$

Proof. Since $E_M^* = L_M^*/F$, we have $L_M^* = L_N^o \oplus F$. ∎

For each $f \in L_M^*$, we define

$$\|f\|_N^o = \|f\|^o = \sup\{f(u) : \|u\| = 1\}, \qquad \|f\|_N = \|f\| = \sup\{f(u) : \|u\|^o = 1\}.$$

THEOREM 1.48. *Let f be as in* (1.23). *Then*

$$\|f\|^o = \|v\|_N^o + \|\varphi\|^o.$$

Proof. It suffices to check that $\|f\|^o \ge \|v\|_N^o + \|\varphi\|^o$. For any $\varepsilon > 0$, choose $x, y \in S(L_M) = \{u \in L_M : \|u\| = 1\}$ such that

$$\|v\|_N^o - \varepsilon < \int_G x(t)v(t)\,dt, \qquad \|\varphi\|^o - \varepsilon < \langle \varphi, y\rangle.$$

Without loss of generality, we may assume $x \in E_M$. Select $\delta > 0$ such that

$$\mu E < \delta \Rightarrow \int_E |x(t)v(t)|\,dt < \varepsilon,$$

then pick $k > 0$ such that $\mu H < \delta$ and that

$$\int_H |y(t)v(t)|dt < \varepsilon, \qquad \int_H M(y(t))\,dt < \varepsilon,$$

where $H = \{t \in G : |y(t)| > k\}$, and define

$$u(t) = \begin{cases} x(t), & t \in G \setminus H, \\ y(t), & t \in H. \end{cases}$$

Then

$$\varrho_M(u) \le \varrho_M(x) + \int_H M(y(t))dt < 1 + \varepsilon,$$

whence

$$\varrho_M\left(\frac{u}{1+\varepsilon}\right) \le \frac{1}{1+\varepsilon}\varrho_M(u) \le 1,$$

i.e., $\|u\| \le 1 + \varepsilon$. It follows from the singularity of φ that

$$\begin{aligned}(1+\varepsilon)\|f\|^o &\ge f(u) = f(x\chi_{G\setminus H}) + f(y\chi_H) = \langle v, x\chi_{G\setminus H}\rangle + \langle v, y\chi_H\rangle + \langle \varphi, y\rangle \\ &\ge \langle v, x\rangle - \varepsilon - \varepsilon + \langle \varphi, y\rangle > \|u\|_N^o + \|\varphi\|^o - 4\varepsilon. \ \blacksquare\end{aligned}$$

Next, we consider the Luxemburg norm of f. We begin with a lemma.

LEMMA 1.49. *For any* $\varphi \in F$,

$$\|\varphi\| = \|\varphi\|^o = \sup\{\varphi(u) : \varrho_M(u) < \infty\} = \sup\{\varphi(u)/\theta(u) : u \in L_M/E_M\}.$$

Proof. Given $u \in L_M \setminus E_M$, let u_n be as in (1.14). Then $\varphi(u) = \varphi(u - u_n) \le \|\varphi\| \cdot \|u - u_n\|$. Hence, $\varphi(u) \le \theta(u)\|\varphi\|$. Moreover, if $\varrho_M(u) < \infty$, then $\varrho_M(u - u_n) \to 0$ as $n \to \infty$. This implies $\theta(u) = \lim_n \|u - u_n\| \le 1$. It follows that

$$\begin{aligned}\|\varphi\| &= \sup_u \varphi(u)/\|u\|^o \le \sup_u \varphi(u)/\|u\| = \|\varphi\|^o \\ &\le \sup\{\varphi(u) : u \in L_M \setminus E_M,\ \varrho_M(u) < \infty\} \\ &\le \sup\{\varphi(u)/\theta(u) : u \in L_M \setminus E_M,\ \varrho_M(u) < \infty\} \\ &\le \sup\{\varphi(u)/\theta(u) : u \in L_M \setminus E_M\} \le \|\varphi\|. \ \blacksquare\end{aligned}$$

Applying Theorem 1.48, Lemma 1.49 and Theorem 1.38 (4), we obtain

COROLLARY 1.50. $f \in F \Leftrightarrow \|f\| = \|f\|^o$.

THEOREM 1.51. *If f has the form* (1.23), *then*

$$\|f\| = \inf\{\lambda > 0 : \varrho_N(v/\lambda) + \lambda^{-1}\|\varphi\| \le 1\}.$$

Proof. Without loss of generality, we may assume $\|f\| = 1$. For any $u \in S(L_M^o)$, $k \in K(u)$ and $\gamma > 0$ satisfying $\varrho_N(v/\gamma) + \gamma^{-1}\|\varphi\| \le 1$, since $\varrho_M(ku) < \infty$, by Lemma 1.49, we have

$$\begin{aligned}\gamma^{-1}f(ku) &= \gamma^{-1}\langle ku, v\rangle + \gamma^{-1}\varphi(ku) \le \varrho_M(ku) + \varrho_N(v/\gamma) + \gamma^{-1}\|\varphi\| \\ &\le \varrho_M(ku) + 1 = k\|u\|^o = k,\end{aligned}$$

i.e., $f(u) \le \gamma$. Since u and γ are arbitrary, we deduce that

$$\|f\| \le \inf\{\lambda > 0 : \varrho_N(v/\lambda) + \lambda^{-1}\|\varphi\| \le 1\}.$$

If the two sides of the inequality are not equal, then there exists $\delta > 0$ such that

$$\varrho_N(v) + \|\varphi\| > 1 + \delta.$$

It follows from Lemma 1.49 that there exists $u_1 \in L_M$ such that $\varrho_M(u_1) \le 1$ and that

$$\varrho_N(v) + \varphi(u_1) > 1 + \delta.$$

Without loss of generality, we may assume that v is a bounded function. Since by (1.9),

$$\varrho_N(v) = \int_G [q(|v(t)|)|v(t)| - M(q(|v(t)|))]\,dt,$$

there exists $u_2 \in E_M$ such that

$$\varrho_N(v) - \delta/2 < \int_G [u_2(t)v(t) - M(u_2(t))]\,dt.$$

Hence, as in the proof of Theorem 1.48, we can construct $u \in L_M$ such that

$$\langle u, v\rangle + \varphi(u) - \varrho_M(u) > \langle u_2, v\rangle + \varphi(u_1) - \varrho_M(u_2) - \delta/2.$$

It follows that

$$\langle u, v\rangle + \varphi(u) - \varrho_M(u) > \varrho_N(v) + \varphi(u_1) - \delta > 1.$$

Combining this with Theorem 1.30, we deduce a contradiction:

$$1 = \|f\| \ge f\left(\frac{u}{\|u\|^o}\right) = \left\langle \frac{u}{\|u\|^o}, v\right\rangle + \left\langle \frac{u}{\|u\|^o}, \varphi\right\rangle > \frac{1 + \varrho_M(u)}{\|u\|^o} \ge 1. \ \blacksquare$$

Now, we investigate singular functionals. Let $L_M^+ = \{u \in L_M : u(t) \ge 0\ \mu\text{-a.e.}\}$. If $\varphi \in F$ and $\varphi(u) \ge 0$ for all $u \in L_M^+$, then we say φ is *positive*, or simply, $\varphi \in F^+$.

THEOREM 1.52. *If* $\varphi, \psi \in F^+$, *then* $\|\psi + \varphi\| = \|\varphi\| + \|\psi\|$.

Proof. For any $x, y \in L_M$, $\varrho_M(x) < \infty$, $\varrho_M(y) < \infty$, let $w(t) = \max\{|x(t)|, |y(t)|\}$. Then $\varrho_M(w) \le \varrho_M(x) + \varrho_M(y) < \infty$, whence by Lemma 1.49 and $\varphi, \psi \in F^+$,

$$\|\varphi + \psi\| \ge \varphi(w) + \psi(w) \ge \varphi(x) + \psi(y).$$

It follows again by Lemma 1.49 that

$$\|\varphi + \psi\| \ge \sup\{\varphi(x) + \psi(y) : \varrho_M(x) + \varrho_M(y) < \infty\} = \|\varphi\| + \|\psi\|. \ \blacksquare$$

For each $\varphi \in F, x \in L_M^+$, we define

$$\varphi^+(x) = \sup\{\varphi(y) : 0 \le y(t) \le x(t)\}, \qquad \varphi^-(x) = -\inf\{\varphi(y) : 0 \le y(t) \le x(t)\}$$

and extend them to L_M. Then $\varphi^+, \psi^- \in F^+$ and $\varphi = \varphi^+ - \varphi^-$.

THEOREM 1.53. *For any* $\varphi \in F$, $\|\varphi\| = \|\varphi^+\| + \|\varphi^-\|$.

Proof. For any $\varepsilon > 0$, by the definition of φ^+, φ^-, there exist $x, y \in L_M^+$ such that $\varrho_M(x) < \infty$, $\varrho_M(y) < \infty$ and that

$$\|\varphi^+\| - \varepsilon < \varphi(x), \qquad \|\varphi^-\| - \varepsilon < \varphi(-y).$$

Since $\varrho_M(x - y) \le \varrho_M(x) + \varrho_M(y) < \infty$,

$$\|\varphi\| \ge \varphi(x - y) \ge \|\varphi^+\| + \|\varphi^-\| - 2\varepsilon. \ \blacksquare$$

For convenience, we define

$$u|_E(t) = u(t)\chi_E(t), \qquad f|_E(u) = f(u|_E),$$

where $u \in L_M$, $f \in L_M^*$ and $E \in \Sigma$.

THEOREM 1.54. *If $\varphi \in F, A, B \in \Sigma$ and $A \cap B = \emptyset$, then $\|\varphi|_{A\cup B}\| = \|\varphi|_A\| + \|\varphi|_B\|$.*

Proof. It is easily verified that $\varphi|^+_{A\cup B} = \varphi|^+_A + \varphi|^+_B$ and $\varphi|^-_{A\cup B} = \varphi|^-_A + \varphi|^-_B$. Therefore, by Theorems 1.52 and 1.53,

$$\begin{aligned}\|\varphi|_{A\cup B}\| &= \|\varphi|^+_{A\cup B}\| + \|\varphi|^-_{A\cup B}\| = \|\varphi|^+_A\| + \|\varphi|^+_B\| + \|\varphi|^-_A\| + \|\varphi|^-_B\| \\ &= \|\varphi|_A\| + \|\varphi|_B\|. \ \blacksquare\end{aligned}$$

THEOREM 1.55. *If $\varphi \in F$ and $\varepsilon > 0$, then there exists $E \in \Sigma$ such that $\|\varphi^+|_{G\setminus E}\| < \varepsilon$ and $\|\varphi^-|_E\| < \varepsilon$.*

Proof. Find $u \in S(L_M)$ such that $\varphi(u) > \|\varphi\| - \varepsilon$. Let $E = \{t \in G : u(t) \ge 0\}$. Then

$$\begin{aligned}\|\varphi^+\| + \|\varphi^-\| - \varepsilon = \|\varphi\| - \varepsilon < \varphi(u) &= \varphi^+(u) - \varphi^-(u) \\ &\le \varphi^+(u|_E) + \varphi^-(-u|_{G\setminus E}) \le \|\varphi^+|_E\| + \|\varphi^-|_{G\setminus E}\|\end{aligned}$$

and thus, by Theorem 1.52,

$$\|\varphi^+|_{G\setminus E}\| = \|\varphi^+\| - \|\varphi^+|_E\| < \varepsilon, \qquad \|\varphi^-|_E\| = \|\varphi^-\| - \|\varphi^-|_{G\setminus E}\| < \varepsilon. \ \blacksquare$$

THEOREM 1.56. *The decomposition $\varphi = \varphi^+ - \varphi^- \in F$ is unique in the sense that if $\varphi = f - g$, $f, g \in F^+$ and $\|f\| + \|g\| = \|\varphi\|$, then $f = \varphi^+$ and $g = \varphi^-$.*

Proof. For any $u \in L_M^+$, we have

$$\begin{aligned}\varphi^+(u) &= \sup\{\varphi(w) : 0 \le w \le u\} = \sup\{f(w) - g(w) : 0 \le w \le u\} \\ &\le \sup\{f(w) : 0 \le w \le u\} = f(u).\end{aligned} \tag{1.24}$$

By the same reason, we have $\varphi^-(u) \le g(u)$. This shows $\|\varphi^+\| \le \|f\|$ and $\|\varphi^-\| \le \|g\|$. It follows from $\|f\| + \|g\| = \|\varphi\| = \|\varphi^+\| + \|\varphi^-\|$ that $\|\varphi^+\| = \|f\|$ and $\|\varphi^-\| = \|g\|$.

For any given $\varepsilon > 0$, pick $E \in \Sigma$ as in Theorem 1.55. Then

$$\|\varphi^+|_E\| = \|\varphi^+\| - \|\varphi^+|_{G\setminus E}\| > \|\varphi^+\| - \varepsilon = \|f\| - \varepsilon.$$

It follows from Theorem 1.54 and (1.24) that

$$\|f|_{G\setminus E}\| = \|f\| - \|f|_E\| \le \|f\| - \|\varphi^+|_E\| < \varepsilon.$$

Similarly, we have $\|g|_E\| < \varepsilon$.

Now, for any $u \in L_M^+$ with $\varrho_M(u) < \infty$,

$$\begin{aligned}\varphi^+(u) &= \varphi^+|_E(u) + \varphi^+|_{G\setminus E}(u) > \varphi^+|_E(u) - \varepsilon = \sup\{f(w|_E) - g(w|_E) : 0 \le w \le u\} - \varepsilon \\ &\ge \sup\{f(w|_E) - \varepsilon : 0 \le w \le u\} - \varepsilon = f(u|_E) - 2\varepsilon = f(u) - f(u|_{G\setminus E}) - 2\varepsilon \\ &> f(u) - 3\varepsilon.\end{aligned}$$

Combine this with (1.24) to obtain

$$0 \le (f - \varphi^+)(u) < 3\varepsilon \qquad (u \in L_M^+,\ \varrho_M(u) < \infty).$$

Taking "sup" over such u and letting $\varepsilon \to 0$, we deduce $\|f - \varphi^+\| = 0$, and so $g = \varphi - f = \varphi - \varphi^+ = \varphi^-$. $\blacksquare$

1.6. Weak topology. Let H be a subset of L_M^*. If $u_n, u \in L_M$ and $f(u_n) \to f(u)$ for each $f \in H$, then we say that $\{u_n\}_{n=1}^\infty$ is *H-weakly convergent* to u, written $u_n \xrightarrow{H} u$. If $f(u_n - u_m) \to 0$ for all $f \in H$ as $n, m \to \infty$, then we say that u_n is an *H-weakly Cauchy sequence*. We say that L_M is *H-weakly sequentially complete* if every H-weakly Cauchy sequence is H-weakly convergent. A subset of L_M is called *H-weakly compact* if each subsequence of it has an H-weakly convergent subsequence.

By the general theory of functional analysis, L_M is w^* sequentially complete, i.e., L_M is E_N-weakly sequentially complete. Moreover, we have

THEOREM 1.57. *L_M is L_N-weakly sequentially complete.*

Proof. Any L_N-weakly Cauchy sequence $\{u_n\}$ has an E_N-weak limit $u \in L_M$. Without loss of generality, we may assume $u = 0$. If u_n is not L_N-weakly convergent, then by passing to a subsequence, we may assume that there exists $v \in L_N$ such that

$$\lim_n \langle v, u_n\rangle = \lim_n \int_G u_n(t)v(t)\,dt = \alpha > 0.$$

Let $G(m) = \{t \in G : |v(t)| \le m\}$. Then $\mu(G \setminus G(m)) \to 0$ and $v|_{G(m)} \in E_N$. Hence, there exist $n_1, m_1 \in \mathbb{N}$ such that

$$\langle v, u_{n_1}\rangle > 4\alpha/5, \qquad \int_{G\setminus G(m_1)} |u_{n_1}(t)v(t)|\,dt < \alpha/5.$$

Therefore,

$$\int_{G(m_1)} u_{n_1}(t)v(t)\,dt > 3\alpha/5.$$

Since $\langle v|_{G(m_1)}, u_n\rangle \to 0$ as $n \to \infty$, there exist $n_2 > n_1$ and $m_2 > m_1$ such that $\langle v, u_{n_2}\rangle > 4\alpha/5$, and

$$\Big|\int_{G(m_1)} u_{n_2}(t)v(t)\,dt\Big| < \alpha/5, \qquad \int_{G\setminus G(m_2)} |u_{n_2}(t)v(t)|\,dt < \alpha/5.$$

It follows that

$$\int_{G(m_2)\setminus G(m_1)} u_{n_2}(t)v(t)\,dt > 3\alpha/5 - \alpha/5 = 2\alpha/5.$$

And so on, by induction, we can find $n_1 < n_2 < \ldots$, and $m_1 < m_2 < \ldots$, such that

$$\int_{G\setminus G(m_i)} |u_{n_i}(t)v(t)|\,dt < \alpha/5, \qquad \int_{G(m_i)\setminus G(m_{i-1})} u_{n_i}(t)v(t)\,dt > 2\alpha/5 \quad (i = 2, 3, \ldots).$$

Since for each $E \in \Sigma$,

$$\int_E [u_{n_{i+1}}(t) - u_{n_i}(t)]v(t)\,dt = \langle u_{n_{i+1}} - u_{n_i}, v|_E\rangle \to 0$$

as $i \to \infty$, thanks to the Lebesgue Theorem, $(u_{n_{i+1}} - u_{n_i})_i$ has equi-continuous integrals, i.e., for any $\varepsilon > 0$, there exists $\delta > 0$ such that $\mu E < \delta$ implies

$$\int_E |[u_{n_{i+1}}(t) - u_{n_i}(t)]v(t)|\,dt < \varepsilon \qquad (i \in \mathbb{N}).$$

But this is impossible since $\mu(G(m_i)) \to 0$ and

$$\int\limits_{G(m_i)\setminus G(m_{i-1})} |[u_{n_i}(t) - u_{n_{i-1}}(t)]v(t)|\,dt$$
$$\geq \int\limits_{G(m_i)\setminus G(m_{i-1})} u_{n_i}(t)v(t)\,dt - \int\limits_{G\setminus G(m_{i-1})} |u_{n_{i-1}}(t)v(t)|\,dt$$
$$> 2\alpha/5 - \alpha/5 = \alpha/5. \ \blacksquare$$

THEOREM 1.58. *L_M is weakly sequentially complete iff $M \in \Delta_2$.*

Proof. If $M \in \Delta_2$, then $L_M^* = E_M^* = L_N^o$, hence, by Theorem 1.57, L_M is weakly sequentially complete.

If $M \notin \Delta_2$, then there exists $u \in L_M \setminus E_M$. Let $\{u_n\}$ be defined as in (1.14). Then $u_n \in E_M$ and for each $f \in L_M^*$, we have $f = v + \varphi$, where $v \in L_N$ and $\varphi \in F$. Hence,

$$|f(u_n - u_{u+p})| = |\langle u_n - u_{u+p}, v\rangle| \leq \int\limits_G |[u_n(t) - u(t)]v(t)|\,dt$$
$$= \int\limits_{G\setminus G(n)} |u(t)v(t)|\,dt \to 0.$$

This means that u_n is a weak Cauchy sequence, and that $u_n \overset{E_N}{\to} u$. If $\{u_n\}$ converges weakly, then $u_n \overset{w}{\to} u$. But by the Hahn–Banach Theorem, we can find $\varphi \in F$ such that $\varphi(u) = d(u, E_M) > 0$, which yields a contradiction: $\varphi(u - u_n) = \varphi(u) > 0$. $\blacksquare$

Next, we turn to L_N-weak compactness and L_N-weak convergence.

THEOREM 1.59. *Let $H = L_N$ or E_N. Then a subset A of L_M is H-weakly compact iff*

$$\limsup_{\mu E\to 0} \Big\{ \int\limits_E |u(t)v(t)|\,dt : u \in A \Big\} = 0 \qquad \textit{for each } v \in H.$$

Proof. If the condition is not necessary, then

$$\int\limits_{E(n)} |u_n(t)v(t)|\,dt \geq \alpha > 0 \qquad (n \in \mathbb{N})$$

for some $v \in H$, $\{u_n\}$ contained in A and $\mu E(n) \to 0$. Since A is H-weakly compact, we may assume $u_n \overset{H}{\to} 0$. Therefore, in the same way as in the proof of Theorem 1.57, we have

$$\lim_{\mu E\to 0} \sup_n \int\limits_E |u_n(t)v(t)|\,dt = 0,$$

a contradiction.

Sufficiency. By the assumption, we know that A is E_N-weakly bounded. Hence, for each u_n contained in A, by passing to a subsequence, we may assume $u_n \overset{E_N}{\to} 0$. We claim that $u_n \overset{H}{\to} 0$. Indeed, for any $v \in H, \varepsilon > 0$, by the assumption, there exists $\delta > 0$ such that

$$\mu E < \delta \Rightarrow \int\limits_E |u_n(t)v(t)|\,dt < \varepsilon \qquad (n \in \mathbb{N}).$$

Choose $m \in \mathbb{N}$ such that $\mu(G \setminus G(m)) < \delta$, where $G(m) = \{t \in G : |v(t)| \le m\}$. Then $v|_{G(m)} \in E_N$, whence there exists $n' \in \mathbb{N}$ such that

$$\Big|\int_G u_n(t)v(t)\chi_{G(m)}(t)\,dt\Big| < \varepsilon \qquad (n > n'),$$

and so, for all $n > n'$,

$$\Big|\int_G u_n(t)v(t)\,dt\Big| \le \Big|\int_{G(m)} u_n(t)v(t)\,dt\Big| + \int_{G\setminus G(m)} |u_n(t)v(t)|\,dt < \varepsilon + \varepsilon = 2\varepsilon. \ \blacksquare$$

THEOREM 1.60. *A subset A of L_M is L_N-weakly compact iff*

$$\limsup_{\lambda\to 0}\{\lambda^{-1}\varrho_M(\lambda u) : u \in A\} = 0.$$

Proof. *Sufficiency.* For any $v \in L_N, v \ne 0$, let $\gamma = \|v\|_N^{-1}$. Then $\varrho_N(\gamma v) \le 1$. Given $\varepsilon > 0$, by the assumption, we can find $\lambda > 0$ such that $\lambda^{-1}\varrho_M(\lambda u) < \gamma\varepsilon$ for all $u \in A$. Choose $\delta > 0$ such that

$$\mu E < \delta \Rightarrow \int_E N(\gamma v(t))\,dt < \lambda\gamma\varepsilon.$$

Then, by the Young Inequality, $\mu E < \delta$ implies

$$\int_E |u(t)v(t)|\,dt \le \gamma\varepsilon/\gamma + \lambda\gamma\varepsilon/(\lambda\gamma) = 2\varepsilon.$$

It follows from Theorem 1.59 that A is L_N-weakly compact.

Necessity. Since A is E_N-weakly compact, without loss of generality, we may assume $\|u\|^o \le 1$ for all $u \in A$. If the condition is not necessary, then

$$\varrho_M(\lambda_k u_k) \ge 3\lambda_k\alpha \qquad (k \in \mathbb{N})$$

for some $\alpha > 0, \{u_k\}$ in A and $0 < \lambda_k \downarrow 0, \sum_{k=1}^\infty \lambda_k \le 1/2$ and $M(k\lambda_k)\mu G \le \lambda_k\alpha$ $(k \in \mathbb{N})$. Recalling that

$$N(p(u)) \le M(u) + N(p(u)) = up(u) \le M(2u) \qquad (u \ge 0),$$

we have

$$\varrho_N(p(\lambda_k|u_k|)) \le \varrho_M(2\lambda_k|u_k|) \le 2\lambda_k\varrho_M(u_k) \le 2\lambda_k.$$

Hence, if we define $v(t) = \sup_k p(\lambda_k|u_k(t)|)$, then by the Fatou Lemma,

$$\varrho_N(v) \le \sum_{k=1}^\infty \varrho_N(p(\lambda_k|u_k|)) \le 2\sum_{k=1}^\infty \lambda_k \le 1.$$

Set $E(k) = \{t \in G : |u_k(t)| \ge k\}$. Then from $M(k)\mu E(k) \le \varrho_M(u_k) \le 1$, we have $\mu E(k) \to 0$. Hence by Theorem 1.59, there exists $k' > 0$ such that

$$\int_{E(k)} |u_k(t)v(t)|\,dt < \alpha \qquad (k > k').$$

This leads to a contradiction:

$$\begin{aligned} 3\lambda_k\alpha < \varrho_M(\lambda_k u_k) &= \int_{G\setminus E(k)} M(\lambda_k u_k(t))\,dt + \int_{E(k)} M(\lambda_k u_k(t))\,dt \\ &\le \lambda_k\alpha + \lambda_k\alpha = 2\lambda_k\alpha \qquad (k > k'). \ \blacksquare \end{aligned}$$

THEOREM 1.61. *Let $H = L_N$ or E_N. Then $u_n \to 0$ H-weakly iff*

(i) $\lim_n \int_E u_n(t)\,dt = 0$ $(E \in \Sigma)$, *and*

(ii) $\lim_{\mu E\to 0} \sup_n \int_E |u_n(t)v(t)|\,dt = 0$ $(v \in H)$.

Proof. *Necessity.* (i) follows from $\chi_E \in H$ $(E \in \Sigma)$ and (ii) follows immediately from Theorem 1.59.

Sufficiency. For any $v \in H$, if v is a simple function, i.e., $v(t) = \sum_{i=1}^m a_i\chi_{E(i)}(t)$ $(a_i \in \mathbb{R})$, then by (i),

$$\langle u_n, v\rangle = \sum_{i=1}^m a_i \int_{E(i)} u_n(t)\,dt \to 0.$$

If $v \in D$, then for any $\varepsilon > 0$, there exists a simple function w such that $|v(t) - w(t)| < \varepsilon$ $(t \in G)$. Choose $n' \in \mathbb{N}$ such that $|\langle u_n, w\rangle| < \varepsilon$ $(n > n')$. Then

$$|\langle u_n, v\rangle| \le |\langle u_n, v - w\rangle| + |\langle u_n, w\rangle| < \varepsilon \int_G |u_n(t)|\,dt + \varepsilon \qquad (n > n').$$

Since by (ii), $\{\int_G |u_n(t)|\,dt\}_n$ is bounded, by letting $n \to \infty$ and $\varepsilon \to 0$, we have $\langle u_n, v\rangle \to 0$.

Finally, we consider the general case $v \in H$. For any $\varepsilon > 0$, by (ii), there exists $\delta > 0$ such that

$$\mu E < \delta \Rightarrow \int_E |u_n(t)v(t)|\,dt < \varepsilon \qquad (n \in \mathbb{N}).$$

Let $G(m) = \{t \in G : |v(t)| < m\}$. Then there exists $m > 0$ such that $\mu(G \setminus G(m)) < \delta$. Since $v|_{G(m)} \in D$, there exists n' such that $|\langle u_n, v|_{G(m)}\rangle| < \varepsilon$ $(n > n')$. It follows that

$$|\langle u_n, v\rangle| \le |\langle u_n, v|_{G(m)}\rangle| + |\langle u_n, v|_{G\setminus G(m)}\rangle| < 2\varepsilon. \ \blacksquare$$

From Theorems 1.59–1.61, we obtain

THEOREM 1.62. *$u_n \overset{E_N}{\to} 0$ iff $\{u_n\}$ is bounded and $\int_E u_n(t)\,dt \to 0$ as $n \to \infty$ for all $E \in \Sigma$.*

THEOREM 1.63. *$u_n \overset{L_N}{\to} 0$ iff*

(i) $\lim_n \int_E u_n(t)\,dt = 0$ $(E \in \Sigma)$, *and*

(ii) $\lim_{\lambda\to 0} \sup_n \lambda^{-1}\varrho_M(\lambda u_n) = 0$.

We now turn to F-weak convergence and F-weak compactness. Since by the Rainwater Theorem, a sequence x_n in a Banach space X is weakly convergent iff $\langle f, x_n\rangle \to 0$ for all $f \in \mathrm{Ext}(B(X^*))$, where $B(X^*) = \{\varphi \in X^* : \|\varphi\| \le 1\}$ and $f \in \mathrm{Ext}(B(X^*))$ means that f is an extreme point of $B(X^*)$, we start by investigating the extreme points of $B(L_M^*)$ in F.

LEMMA 1.64. *Let $\varphi \in F$, $x, y \in B(L_M)$ and $A \in \Sigma$. Then*

(i) *$x(t)y(t) \ge 0$ on $A \Rightarrow \varphi(y|_A) \ge \varphi(x) - \|\varphi\|$, and*

(ii) *$x(t)y(t) \le 0$ on $A \Rightarrow \varphi(y|_A) \le \|\varphi\| - \varphi(x)$.*

Proof. Since (i) and (ii) are obviously equivalent, we only prove (i). As $\varrho_M(x-y|_A) \le \varrho_M(x) + \varrho_M(y) \le 2 < \infty$, in light of Lemma 1.49, $\varphi(x - y|_A) \le \|\varphi\|$. $\blacksquare$

THEOREM 1.65. *$\varphi \in S(F)$ is an extreme point of $B(L_M^*)$ iff $\|\varphi|_E\| = 0$ or $\|\varphi|_{G\setminus E}\| = 0$ for every $E \in \Sigma$.*

Proof. If the necessity does not hold, then there exists $E \in \Sigma$ such that $\alpha = \|\varphi|_E\| > 0$ and $\beta = \|\varphi|_{G\setminus E}\| > 0$. In view of Theorem 1.54, $\alpha + \beta = 1$. Define $\varphi' = \alpha^{-1}\varphi|_E$ and $\varphi'' = \beta^{-1}\varphi|_{G\setminus E}$. Then $\varphi', \varphi'' \in B(L_M^*), \varphi' \neq \varphi''$ and $\varphi = \alpha\varphi' + \beta\varphi''$, contradicting the condition $\varphi \in \mathrm{Ext}(B(L_M^*))$.

Sufficiency. From the assumption and Theorem 1.55, we deduce that $\|\varphi^+\| = 0$ or $\|\varphi^-\| = 0$. Without loss of generality, we may assume $\varphi^- = 0$, i.e., $\varphi = \varphi^+$. Let $f_1, f_2 \in B(L_M^*)$ be such that $\varphi = 2^{-1}(f_1 + f_2)$. We have to prove $f_1 = f_2$. Write $f_i = v_i + \varphi_i$, where $v_i \in L_N$ and $\varphi_i \in F$, $i = 1, 2$. Then by Theorem 1.48,

$$\begin{aligned} 2 &= \|f_1\|^o + \|f_2\|^o = \|\varphi_1\| + \|\varphi_2\| + \|v_1\|_N^o + \|v_2\|_N^o \\ &\geq \|f_1 + f_2\| = 2\|\varphi\| = 2, \end{aligned} \tag{1.25}$$

i.e., $v_1 = v_2 = 0$, or $f_i = \varphi_i \in F$, $i = 1, 2$.

Now, we show $\varphi = f_i$, or equivalently, φ^0 is contained in $f_i^0, i = 1, 2$, where $f^0 = \{u \in L_M : f(u) = 0\}$. Let $\varepsilon > 0, \|y\| \leq 1$ and $\varphi(y) = 0$. Find $x \in S(L_M)$ such that $\varphi(x) > 1 - \varepsilon$. Set $E = \{t \in G : x(t)y(t) \leq 0\}$. Then, by the assumption, we may assume $\varphi|_{G\setminus E} = 0$. As in (1.25), we deduce $f_i|_{G\setminus E} = 0, i = 1, 2$. Since $f_i(x) \leq 1$ and $f_1 + f_2 = 2\varphi$, we find $f_i(x) > 1 - 2\varepsilon$, $i = 1, 2$. Hence, Lemma 1.64 yields

$$f_i(y) = f_i(y|_E) \leq \|f_i\| - f_i(x) < 2\varepsilon \qquad (i = 1, 2).$$

Letting $\varepsilon \to 0$, we obtain $f_i(y) \leq 0$. Observing that $y \in \varphi^0$ is arbitrary and that φ^0 is a linear space, we deduce $f_i(y) = 0, i = 1, 2$. ∎

From Theorems 1.55 and 1.65, we obtain

COROLLARY 1.66. *If $\varphi \in F \cap \mathrm{Ext}(B(L_M^*))$, then $\|\varphi^+\| \cdot \|\varphi^-\| = 0$.*

LEMMA 1.67. *For any $x \in L_M$ and any measurable partition $\{E(i)\}_{i=1}^n$ of G,*

$$\theta(x) = \max_i\{\theta(x|_{E(i)})\}.$$

Proof. It is obvious that $\theta(x|_{E(i)}) \leq \theta(x)$ for all $i \leq m$. If $\alpha = \max_i\{\theta(x|_{E(i)})\} < \theta(x)$, then for all $\beta \in (\alpha, \theta(x))$,

$$\varrho_M(x/\beta) = \sum_{i=1}^m \varrho_M(\beta^{-1}x|_{E(i)}) < \infty.$$

This means $\beta \geq \theta(x)$, contradicting the choice of β. ∎

THEOREM 1.68. *$x_n \xrightarrow{F} 0$ iff*

$$\lim_m \theta(\min_{i\leq m}\{|y_i|\}) = 0$$

for each subsequence $\{y_i\}$ of $\{x_n\}$.

Proof. If the condition is not sufficient, then by the Rainwater Theorem, there exist $\varepsilon > 0$, $f \in F$, an extreme point of $B(L_M^*)$ and $\{y_i\}$, a subsequence of $\{x_n\}$, such that

$f(y_k) > \varepsilon$ for all $k \in \mathbb{N}$. Choose $m \in \mathbb{N}$ such that $\theta(\min_{k\le m}\{|y_k|\}) < \varepsilon$ and let

$$E(k) = \{t \in G : |y_k(t)| = \min_{k\le m} |y_k(t)|\} \qquad (k \le m).$$

Then, by Theorem 1.65, there exists $k' \le m$ such that

$$f(y_{k'}|_{E(k')}) = f|_{E(k')}(y_{k'}) = f(y_{k'}) > \varepsilon.$$

But this is not true since by Lemma 1.49,

$$f(y_{k'}|_{E(k')}) \le \theta(y_{k'}|_{E(k')})\|f\| \le \theta(\min_{k\le m}\{|y_k|\}) < \varepsilon.$$

Now, we suppose that the condition is not necessary, i.e., there exist $\varepsilon > 0$ and $\{y_k\}$, a subsequence of $\{x_n\}$, such that

$$\theta(\min_{k\le m}\{|y_k|\}) > \varepsilon \qquad (m \in \mathbb{N}).$$

Let $G_1^1 = \{t \in G : y_1(t) \ge 0\}$ and $G_2^1 = G \setminus G_1^1$. Suppose that $\{G_s^k\}$ have been found for $s = 1, 2, \ldots, 2^k$, $k = 1, 2, \ldots, m$. Then we define

$$G_{2s-1}^{m+1} = \{t \in G_s^m : y_{m+1}(t) \ge 0\}, \quad G_{2s}^{m+1} = G_s^m \setminus G_{2s-1}^{m+1} \quad (s = 1, 2, \ldots, 2^{m+1}).$$

By induction, for each $k \in \mathbb{N}$, we construct a partition $\{G_s^k\}_{s\le 2^k}$ of G in Σ such that for any $m \ge k, y_k(t)$ is nonnegative or nonpositive on $G_s^m, s = 1, 2, \ldots, 2^m$. In light of Lemma 1.67, there exists $s = s_m \le 2^m$ such that

$$\theta(z_m) = \theta(\min_{k\le m}\{|y_k|\}) > \varepsilon,$$

where $z_m = (\min_{k\le m} |y_k|)|_{G_s^m}$. Therefore, Theorem 1.44 yields an $f_m \in F$ such that $\|f_m\| = 1$ and

$$f_m(z_m) = \theta(z_m) > \varepsilon \qquad (m \in \mathbb{N}).$$

Notice that $B(L_M^*)$ is w^* compact, and the sequence f_m has a w^*-cluster point $f \in F$. It follows that for each $k \in \mathbb{N}$, there exists $m > k$ such that

$$|f(y_k) - f_m(y_k)| < \varepsilon/2.$$

In view of

$$\|f_m|_{G_s^m}\| \ge \frac{f_m(z_m)}{\theta(z_m)} = 1 = \|f_m\|,$$

we know $\|f_m|_{G\setminus G_s^m}\| = 0$ thanks to Theorem 1.54. Hence,

$$|f(y_k)| \ge |f_m(y_k)| - |f(y_k) - f_m(y_k)| \ge |f_m(y_k|_{G_s^m})| - \varepsilon/2.$$

Recalling that

$$\theta(z_m) = f_m(z_m) = f_m^+(z_m) - f_m^-(z_m) \le f_m^+(z_m) \le \theta(z_m)\|f_m^+\| \le \theta(z_m),$$

we find that $f_m \in F^+$. Therefore, observing that $0 \le z_m(t) \le |y_k(t)|$ and that $y_k(t)$ is either nonpositive or nonnegative on G_s^m, we deduce $|f(y_k)| \ge f_m(z_m) - \varepsilon/2 > \varepsilon/2$. This contradicts the hypothesis that $f(x_n) \xrightarrow{F} 0$. ■

Thanks to Theorems 1.63 and 1.68, we obtain

THEOREM 1.69. *$x_n \to 0$ weakly iff*

(i) $\lim_n \int_E x_n(t)\,dt = 0$ *for all* $E \in \Sigma$,

(ii) $\lim_{\lambda\to 0}\sup_n \lambda^{-1}\varrho_M(\lambda x_n)=0$, *and*
(iii) $\lim_m \theta(\sup_{k\le m}|y_k|)=0$ *for every subsequence* $\{y_k\}$ *of* $\{x_n\}$.

THEOREM 1.70. *A subset* A *of* L_M *is weakly compact iff*

(i) $\lim_{\lambda\to 0}\sup_{x\in A}\lambda^{-1}\varrho_M(\lambda x)=0$, *and*
(ii) $\lim_m \theta(\sup_{k\le m}|x_k-x|)=0$ *for every subsequence* $\{x_k\}$ *in* A *that satisfies* $\lim_k\int_E[x_k(t)-x(t)]\,dt=0$ *for all* $E\in\Sigma$.

Proof. $\Rightarrow$ (i) is a direct consequence of Theorem 1.60.
(ii) Let $\{x_n\}$ be contained in A and

$$\lim_k\int_E[x_k(t)-x(t)]\,dt=0\qquad(E\in\Sigma).$$

Since A is weakly compact, $\{x_k\}$ has a subsequence $\{y_n\}$ converging to x' weakly. It follows from Theorem 1.69 that

$$\lim_m\theta(\sup_{k\le m}|x_k-x'|)\le\lim_m\theta(\sup_{n\le m}|y_n-x'|)=0.$$

Observe that $y_n\to x'$ E_N-weakly, and so, by Theorem 1.62, $x'=x$.

$\Leftarrow$ For any $\{x_k\}$ in A, by (i), we may asssume that $x_k\to x$ L_N-weakly. Hence, for any subsequence $\{y_n\}$ of $\{x_k\}$, by condition (ii) and Theorem 1.62, $\lim_m\theta(\sup_{n\le m}|y_n-x|)=0$, i.e., $x_k\to x$ F-weakly. ∎

1.7. Norm attainable functionals. Let x,x^* be elements in a Banach space and its dual respectively. If $\langle x^*,x\rangle=\|x^*\|\cdot\|x\|>0$, then we say that x^* is *norm attainable* at $x/\|x\|$, and $x^*/\|x^*\|$ a *supporting functional* of x.

THEOREM 1.71. $\varphi\in F\setminus\{0\}$ *is not norm attainable on* $S(L_M^o)$.

Proof. For any $u\in S(L_M^o)$, we have $\varphi(u)\le\|\varphi\|\cdot\|u\|<\|\varphi\|\cdot\|u\|^o=\|\varphi\|$. ∎

THEOREM 1.72. *Each* $\varphi\in F^+$ *is norm attainable on* $S(L_M)$.

Proof. For any $\varepsilon_n\downarrow 0$, choose $u_n\in S(L_M)$ such that $\varphi(u_n)>\|\varphi\|-\varepsilon_n$. Since $\varrho_M(u_n)\le 1<\infty$ and $\varphi(E_M)=\{0\}$, we may assume that $\varrho_M(u_n)\le 2^{-n}$. Define $u(t)=\sup|u_n(t)|$. Then $\varrho_M(u)\le\sum_{n=1}^\infty\varrho_M(u_n)\le 1$, i.e., $u\in S(L_M)$, and $\varphi(u)\ge\sup_n\varphi(|u_n|)=\|\varphi\|$ since $\varphi\in F^+$. ∎

THEOREM 1.73. $\varphi\in F\setminus\{0\}$ *is norm attainable on* $S(L_M)$ *iff there exists* $E\in\Sigma$ *such that* $\varphi^+=\varphi|_E$ *and* $\varphi^-=\varphi|_{G\setminus E}$.

Proof. $\Leftarrow$ By Theorem 1.72, there exist $x,y\in S(L_M^+)$ such that $\varphi|_E(x)=\varphi^+(x)=\|\varphi^+\|$ and $\varphi|_{G\setminus E}(y)=\varphi^-(y)=\|\varphi^-\|$. Without loss of generality, we assume $\varrho_M(x|_E)\le 1/2$ and $\varrho_M(y|_{G\setminus E})\le 1/2$. Hence, $\varrho_M(x|_E-y|_{G\setminus E})\le\varrho_M(x)+\varrho_M(y)\le 1$, i.e., $x|_E-y|_{G\setminus E}\in B(L_M)$, and

$$\varphi(x|_E-y|_{G\setminus E})=\|\varphi^+\|+\|\varphi^-\|=\|\varphi\|.$$

$\Rightarrow$ Let $x\in S(L_M)$ satisfy $\varphi(x)=\|\varphi\|$. Define $E=\{t\in G: x(t)\ge 0\}$. Then by Theorems 1.54 and 1.56, it suffices to show that $\varphi|_E,-\varphi|_{G\setminus E}\in F^+$.

If $\varphi|_E \notin F^+$, then there exists $y \in L_M^+$ such that $\varphi|_E(y) < 0$. The singularity of φ allows us to assume $\varrho_M(y) \le 1/2$ and $\varrho_M(x) \le 1/2$. Therefore, $u = x|_{G\setminus E} - y|_E \in B(L_M)$ and so,

$$\|\varphi^-\| \ge \varphi^-(-u) = -\varphi^+(u) + \varphi(u) \ge \varphi(u) = \varphi(x|_{G\setminus E}) - \varphi|_E(y) > \varphi(x|_{G\setminus E}).$$

This leads to a contradiction:

$$\|\varphi\| = \|\varphi^+\| + \|\varphi^-\| > \varphi(x|_E) + \varphi(x|_{G\setminus E}) = \varphi(x) = \|\varphi\|.$$

Similarly, we can show $-\varphi|_{G\setminus E} \in F^+$. ∎

THEOREM 1.74. *If $\varphi \in F\setminus\{0\}$ is norm attainable at $x \in S(L_M)$, then $\varphi(x|_A) = \|\varphi|_A\|$ for all $A \in \Sigma$.*

Proof. This follows from

$$\|\varphi\| = \|\varphi|_A\| + \|\varphi|_{G\setminus A}\| \ge \varphi|_A(x) + \varphi|_{G\setminus A}(x) = \varphi(x) = \|\varphi\|. \ ∎$$

THEOREM 1.75. *The set of all norm attainable singular functionals is dense in F.*

Proof. For any $\varphi \in F$ and $\varepsilon > 0$, Theorem 1.55 yields an $E \in \Sigma$ such that $\|\varphi^+|_{G\setminus E}\| < \varepsilon$ and $\|\varphi^-|_E\| < \varepsilon$. Let $\psi = \varphi^+|_E - \varphi^-|_{G\setminus E}$. Then by Theorems 1.54, 1.56 and 1.73, ψ is norm attainable, and we also have

$$\|\varphi - \psi\| \le \|\varphi^+ - \psi|_E\| + \|\varphi^- - \psi|_{G\setminus E}\| = \|\varphi^+|_{G\setminus E}\| + \|\varphi^-|_E\| < 2\varepsilon. \ ∎$$

THEOREM 1.76. *$f = v + \varphi$ $(0 \ne v \in L_N,\ \varphi \in F)$ is norm attainable at $x \in S(L_M)$ iff*

(i) $\varrho_M(x) = 1$,
(ii) $\varphi(x) = \|\varphi\|$, *and*
(iii) $\int_G kv(t)x(t)\,dt = \varrho_M(x) + \varrho_N(kv)$,

where $k \in K_N(v) = \{k : k^{-1}[1 + \varrho_N(kv)] = \|v\|_N^o\}$.

Proof. The conclusion follows from

$$\begin{aligned}\|f\|^o = f(x) = k^{-1}\langle kv, x\rangle + \varphi(x) &\le k^{-1}[\varrho_M(x) + \varrho_N(kv)] + \varphi(x)\\ &\le k^{-1}[1 + \varrho_N(kv)] + \|\varphi\| = \|v\|_N^o + \|\varphi\| = \|f\|^o. \ ∎\end{aligned}$$

REMARK. By Theorem 1.44, Theorem 1.76 (ii) and the fact that $\varphi(x) \le \theta(x)\|\varphi\|$, we find that $\theta(x) < \|x\|$ iff all supporting functionals of x belong to L_N^o.

THEOREM 1.77. *$0 \ne f = v + \varphi$ $(v \in L_N,\ \varphi \in F)$ is norm attainable at $x \in S(L_M^o)$ iff*

(i) $\varrho_N(v/\|f\|) + \|\varphi\|/\|f\| = 1$,
(ii) $\|\varphi\| = \varphi(kx)$, *and*
(iii) $\int_G kx(t)(v(t)/\|f\|)\,dt = \varrho_M(kx) + \varrho_N(v/\|f\|)$,

where $k \in K(x)$.

Proof. Since by Theorem 1.51 and the Levy Theorem, we always have $\varrho_N(v/\|f\|) + \|\varphi\|/\|f\| \le 1$, the conclusion follows from

$$\begin{aligned}1 = \frac{f(x)}{\|f\|} &= k^{-1}\left[\left\langle \frac{v}{\|f\|}, kx\right\rangle + \frac{\varphi(kx)}{\|f\|}\right]\\ &\le k^{-1}\left[\varrho_N\left(\frac{v}{\|f\|}\right) + \varrho_M(kx) + \frac{\|\varphi\|}{\|f\|}\right]\end{aligned}$$

$$\le k^{-1}[1+\varrho_M(kx)] = \|x\|^o = 1,$$

where $\varphi(kx) \le \|\varphi\|$ holds by Lemma 1.49 and $\varrho_M(kx) = k-1 < \infty$. ∎

REMARK. From Theorem 1.77, Theorem 1.44 and (1.9), we know that all supporting functionals of a point $x \in L_M^o$ are in L_N iff for any $k \in [k^*(x), k^{**}(x)]$, either $\theta(x) < 1/k$ or $\varrho_N(p_-(k|x|)) = 1$, where $p_-(0) = 0$ and $p_-(t) = \sup\{p(s) : 0 \le s < t\}$ for $t > 0$.

Now, we turn to the case $f = v \in L_N$. First we observe, by Theorem 1.76 (i), that x has no supporting functional in $S(L_N^o)$ if $\varrho_M = (x/\|x\|) < 1$.

THEOREM 1.78. *Let $\varrho_M(x/\|x\|) = 1$. Then $v \in S(L_N^o)$ is a supporting functional of x iff $v = (w/\|w\|_N^o)\operatorname{sign} x$ for some w satisfying*

$$p_-(|x(t)|/\|x\|) \le w(t) \le p(|x(t)|/\|x\|) \qquad (\mu\text{-a.e. } t \in G).$$

Proof. Suppose $\langle v, x\rangle = \|v\|_N^o\|x\| = \|x\|$. Then $v(t)x(t) \ge 0$ μ-a.e. Given $k \in K_N(v)$, by Theorem 1.76 (iii) and (1.9),

$$p_-(|x(t)|/\|x\|) \le k|v(t)| \le p(|x(t)|/\|x\|) \qquad (\mu\text{-a.e. } t \in G).$$

Hence, $w = k|v|$ is as required.

Now, let

$$v = \frac{w}{\|w\|_N^o}\operatorname{sign} x, \qquad p_-(|x(t)|/\|x\|) \le w(t) \le p(|x(t)|/\|x\|).$$

Then by (1.9) and Theorem 1.30,

$$\begin{aligned} 1 &\ge \left\langle v, \frac{x}{\|x\|}\right\rangle = \frac{1}{\|w\|_N^o}\left\langle w, \frac{|x|}{\|x\|}\right\rangle = \frac{1}{\|w\|_N^o}\left[\varrho_N(w) + \varrho_M\left(\frac{x}{\|x\|}\right)\right] \\ &= \frac{1}{\|w\|_N^o}[\varrho_N(\|w\|_N^o v) + 1] \ge \|v\|_N^o = 1. \ ∎ \end{aligned}$$

COROLLARY 1.79. *If $\varrho_M(x/\|x\|) = 1$, then x has a supporting functional in $S(L_N^o)$ iff $p_-(|x|/\|x\|) \in L_N$.*

The following theorem is proved analogously.

THEOREM 1.80. *$v \in S(L_N)$ is a supporting functional of $x \in L_M^o$ iff $\varrho_N(v) = 1$ and*

$$p_-(k|x(t)|) \le v(t)\operatorname{sign} x(t) \le p(k|x(t)|)$$

μ-a.e. on G, where $k \in K(x)$.

COROLLARY 1.81. *If $K(x)$ contains more than one point, then x has the unique supporting functional $v = p(k|x|)\operatorname{sign} x$, where $k \in \operatorname{int} K(x)$.*

Proof. Let $f = v + \varphi$ ($v \in L_N$, $\varphi \in F$) be a supporting functional of x. Then by Theorem 1.77 (ii), $\varphi = 0$. Since $\varrho_N(p(k|x|)) = 1$ for all $k \in \operatorname{int} K(x)$ by the proof of Theorem 1.31, we deduce that for μ-a.e. $t \in G$, $p(k|x(t)|)$ is a constant on $\operatorname{int} K(x)$, and so $p(k|x(t)|) = p_-(k|x(t)|)$ for such $t \in G$ and $k \in \operatorname{int} K(x)$. The conclusion follows from Theorem 1.80. ∎

COROLLARY 1.82. *If $K(x)$ has only one point k, then x has a supporting functional in L_N iff $\varrho_N(p(k|x|)) \ge 1$.*

To end this section, we deal with the special case where x has only countably many values.

PROPOSITION 1.83. *If x has only countably many values, i.e., $x = \sum_{k=1}^{\infty} u_k \chi_{G_k}$, where $\{u_k\} \subset \mathbb{R}$ and $\{G_k\}$ is a partition of G in Σ, and x has a supporting functional $v \in S(L_N)$, then x has a supporting functional w having the form $w = \sum_{k=1}^{\infty} w_k \chi_{G_k}$, where $\{w_k\} \subset \mathbb{R}$.*

Proof. Without loss of generality, we may assume $\mu G_k > 0, k \in \mathbb{N}$. Let

$$w_k = \frac{1}{\mu G_k} \int_{G_k} v(t)\,dt, \qquad w = \sum_{k=1}^{\infty} w_k \chi_{G_k}.$$

Then

$$\|x\|^o = \langle v, x\rangle = \sum_{k=1}^{\infty} u_k \int_{G_k} v(t)\,dt = \langle x, w\rangle$$

and by the Jensen Inequality,

$$\varrho_N(w) = \sum_{k=1}^{\infty} N\Big(\frac{1}{\mu G_k} \int_{G_k} v(t)\,dt\Big)\mu G_k \le \sum_{k=1}^{\infty} \int_{G_k} N(v(t))\,dt = \varrho_N(v) = 1.$$

Hence, w is a supporting functional of x. ∎

PROPOSITION 1.84. *Let x have the form as in Proposition 1.83 and $v \in S(L_N^o)$ be a supporting functional of x. Then x has a supporting functional w having the form as in Proposition 1.83.*

Proof. Let

$$w_k = \frac{1}{\mu G_k} \int_{G_k} v(t)\,dt, \qquad w = \sum_{k=1}^{\infty} w_k \chi_{G_k}.$$

Then $\langle w, x\rangle = \|x\|$. It remains to show $\|w\|_N^o \le 1$.

For any $u^* \in L_M$, $\varrho_M(u^*) \le 1$, let

$$u'_k = \frac{1}{\mu G_k} \int_{G_k} u^*(t)\,dt, \qquad u' = \sum_{k=1}^{\infty} u'_k \chi_{G_k}.$$

Then by the Jensen Inequality, we can prove $\varrho_M(u') \le \varrho_M(u^*) \le 1$. Hence, $\langle w, u^*\rangle = \langle v, u'\rangle \le \|v\|_N^o = 1$. Since u^* is arbitrary, we get $\|w\|_N^o \le 1$. ∎

1.8. Isomorphic subspaces. In this section, we seek for the criteria so that L_M has (complemented) subspaces isomorphic to l^∞, c_0 or l^1.

LEMMA 1.85. *If $M \notin \Delta_2$, then for each $\varepsilon \in (0,1)$, there exists $x_n = u_n \chi_{G_n} \in L_M$, where $u_n > 0$, $\mu G_n > 0$ and $G_i \cap G_j = \emptyset$ $(i \ne j)$, $n = 1, 2, \ldots$, such that $\varrho_M(\sum_{n=1}^{\infty} x_n) \le \varepsilon$ and*

(i) $$\frac{1}{1+\varepsilon} \le \|x_n\| \le \Big\|\sum_{n=1}^{\infty} x_n\Big\| \le 1, \qquad \frac{1}{1+\varepsilon} \le \|x_n\|^o \le \Big\|\sum_{n=1}^{\infty} x_n\Big\|^o \le 1+\varepsilon,$$

(ii) *for every* $\alpha = (\alpha_n) \in l^\infty$,

$$\frac{1}{1+2\varepsilon}\|\alpha\|_\infty \le \Big\|\sum_{n=1}^\infty \alpha_n x_n\Big\| \le \|\alpha\|_\infty, \qquad \frac{1}{1+2\varepsilon}\|\alpha\|_\infty \le \Big\|\sum_{n=1}^\infty \alpha_n x_n\Big\|^o \le (1+\varepsilon)\|\alpha\|_\infty.$$

Proof. By Theorem 1.13 (2), there exist $u_n \uparrow \infty$ and disjoint $\{G_n\}$ in Σ such that

$$M((1+\varepsilon)u_n) > \varepsilon^{-1}2^{n+1}M(u_n), \qquad M(u_n)\mu G_n = 2^{-n}\varepsilon.$$

Let $x_n = u_n\chi_{G_n}$. Then

$$\varrho_M(x_n) < \varrho_M\Big(\sum_{n=1}^\infty x_n\Big) = \sum_{n=1}^\infty M(u_n)\mu G_n = \varepsilon < 1$$

and

$$\varrho_M((1+\varepsilon)x_n) > \varepsilon^{-1}2^{n+1}M(u_n)\mu G_n = 2 > 1.$$

Hence,

$$\frac{1}{1+\varepsilon} \le \|x_n\| \le \Big\|\sum_{n=1}^\infty x_n\Big\| \le 1$$

and by Theorem 1.30,

$$\frac{1}{1+\varepsilon} < \|x_n\| < \|x_n\|^o \le \Big\|\sum_{n=1}^\infty x_n\Big\|^o \le 1 + \varrho_M\Big(\sum_{n=1}^\infty x_n\Big) \le 1+\varepsilon.$$

For (ii), let $\alpha = (\alpha_n) \in l^\infty$. By (i), we immediately have

$$\Big\|\sum_{n=1}^\infty \alpha_n x_n\Big\| \le \Big\|\sum_{n=1}^\infty \|\alpha\|_\infty x_n\Big\| = \|\alpha\|_\infty\Big\|\sum_{n=1}^\infty x_n\Big\| \le \|\alpha\|_\infty,$$
$$\Big\|\sum_{n=1}^\infty \alpha_n x_n\Big\|^o \le \|\alpha\|_\infty\Big\|\sum_{n=1}^\infty x_n\Big\|^o \le (1+\varepsilon)\|\alpha\|_\infty.$$

On the other hand, if we choose $m \in \mathbb{N}$ such that $(1+2\varepsilon)|\alpha_m| \ge (1+\varepsilon)\|\alpha\|_\infty$, then

$$\begin{aligned}\Big\|(1+2\varepsilon)\sum_{n=1}^\infty \alpha_n x_n\Big\|^o &\ge \Big\|(1+2\varepsilon)\sum_{n=1}^\infty \alpha_n x_n\Big\| \\ &\ge \|(1+2\varepsilon)\alpha_m x_m\| \ge (1+\varepsilon)\|\alpha\|_\infty\|x_m\| \ge \|\alpha\|_\infty. \ \blacksquare\end{aligned}$$

Definition 1.86. Let X, Y be Banach spaces. If for each $\varepsilon > 0$, X has a complemented subspace isomorphic to Y and the isomorphism T satisfies

$$\max\{\|T\|, \|T^{-1}\|\} < 1+\varepsilon,$$

then we say that Y is an *almost isometric complemented copy* of X.

Theorem 1.87. *If* $M \notin \Delta_2$, *then*

(i) l^∞ *is an almost isometric complemented copy of* L_M (L_M^o), *and*
(ii) c_0 *is an almost isometric complemented copy of* E_M (E_M^o).

Proof. We only prove the theorem for the spaces L_M and E_M.

Given $\varepsilon \in (0,1)$. Construct x_n as in Lemma 1.85 and define

$$T(\alpha_n) = \sum_{n=1}^{\infty} \alpha_n x_n \qquad ((\alpha_n) \in l^\infty),$$

$$X = \Big\{ \sum_{n=1}^{\infty} \alpha_n x_n : (\alpha_n) \in l^\infty \Big\}, \qquad X_0 = \Big\{ \sum_{n=1}^{\infty} \alpha_n x_n : (\alpha_n) \in c_0 \Big\}.$$

Then by Lemma 1.85, T is an isomorphism from l^∞ to X, $\|T\| \le 1$ and $\|T^{-1}\| \le 1 + 2\varepsilon$. It remains to show that

(a) X is a complemented subspace of L_M, and
(b) X_0 is a complemented subspace of E_M.

Define $P : L_M \to L_M$ by

$$Px = \sum_{n=1}^{\infty} \Big[\frac{1}{\mu G_n} \int_{G_n} x(t)\, dt \Big] \chi_{G_n}.$$

Then clearly, P is a linear operator and $P^2 = P$. Hence, to verify (a), it suffices to show that P is bounded and that $PL_M = X$. Let $x \in L_M$ and $a > 0$. By the Jensen Inequality,

$$\begin{aligned} \varrho_M(aPx) &= \sum_{n=1}^{\infty} M\Big(\frac{1}{\mu G_n} \int_{G_n} ax(t)\, dt \Big) \\ &\le \sum_{n=1}^{\infty} \int_{G_n} M(ax(t))\, dt = \varrho_M(ax). \end{aligned} \tag{1.26}$$

This means $\|P\| \le 1$.

Now, we show $PL_M = X$. Given $x \in X$, it is trivial to check that $Px = x$, so X is contained in PL_M. Conversely, for any $x \in L_M$, let

$$\alpha_n = \frac{1}{u_n \mu G_n} \int_{G_n} x(t)\, dt.$$

Then

$$Px = \sum_{n=1}^{\infty} \Big(\frac{1}{\mu G_n} \int_{G_n} x(t)\, dt \Big) \chi_{G_n} = \sum_{n=1}^{\infty} \alpha_n x_n \in L_M.$$

Hence,

$$\infty > \Big\| \sum_{n=1}^{\infty} \alpha_n x_n \Big\| \ge \|\alpha_n x_n\| \ge \frac{1}{1+\varepsilon} |\alpha_n|.$$

This shows $(\alpha_n) \in l^\infty$, therefore, $Px \in X$.

To prove (b), we need to show that X_0 is contained in E_M and that PE_M is contained in X_0. For any $x = \sum_{n=1}^{\infty} \alpha_n x_n \in X_0$, i.e., $\alpha_n \to 0$,

$$\Big\| \sum_{n=m}^{\infty} \alpha_n x_n \Big\| \le \sup_{n \ge m} |\alpha_n| \Big\| \sum_{n=m}^{\infty} x_n \Big\| \le \sup_{n \ge m} |\alpha_n| \to 0 \qquad (m \to \infty).$$

It follows from Theorem 1.27 that $x \in E_M$.

Finally, for any $x \in E_M$, by (1.26), $Px = \sum_{n=1}^{\infty} \alpha_n x_n \in E_M$. Hence, Theorem 1.27 implies

$$|\alpha_n| \le (1+\varepsilon)\|\alpha_n x_n\| \le (1+\varepsilon)\Big\|\sum_{k=n}^{\infty} \alpha_n x_n\Big\| \to 0$$

as $n \to \infty$. This means $(\alpha_n) \in c_0$, so that $Px \in X_0$. ■

COROLLARY 1.88. *L_M is separable iff $M \in \Delta_2$.*

THEOREM 1.89. *If $M \notin \Delta_2$, then L_M has a subspace isometric to l^∞.*

Proof. Choose $\varepsilon_n > 0$ such that $\sum \varepsilon_n \le 1$ and pairwise disjoint $\{G_n\}$ in Σ such that $\mu G_n > 0, n \in \mathbb{N}$. For each $n \in \mathbb{N}$, as in Example 1.19, we can construct a point $x_n \in L_M$ such that $\varrho_M(x_n) \le \varepsilon_n, \|x_n\| = 1$ and the support of x_n is in G_n. Since

$$\varrho_M\Big(\sum_{n=1}^{\infty} x_n\Big) = \sum_{n=1}^{\infty} \varrho_M(x_n) = \sum_{n=1}^{\infty} \varepsilon_n \le 1,$$

it follows that $1 = \|x_n\| \le \|\sum_{n=1}^{\infty} x_n\| \le 1$. Let

$$X = \Big\{\sum_{n=1}^{\infty} \alpha_n x_n : (\alpha_n) \in l^\infty\Big\}, \qquad T(\alpha_n) = \sum_{n=1}^{\infty} \alpha_n x_n.$$

Then for each $(\alpha_n) \in l^\infty$,

$$\|T(\alpha_n)\| = \Big\|\sum_{n=1}^{\infty} \alpha_n x_n\Big\| \le \|(\alpha_n)\|_\infty \Big\|\sum_{n=1}^{\infty} x_n\Big\| = \|(\alpha_n)\|_\infty,$$

and

$$\Big\|T^{-1}\Big(\sum_{n=1}^{\infty} \alpha_n x_n\Big)\Big\|_\infty = \|(\alpha_n)\|_\infty = \sup_n |\alpha_n| = \sup_n \|\alpha_n x_n\| \le \Big\|\sum_{n=1}^{\infty} \alpha_n x_n\Big\|.$$

This means $\|T\| = \|T^{-1}\| = 1$, i.e., $T : l^\infty \to X$ is an isometry. ■

REMARK. Consulting Theorem 3.26, one will find that L_M^o has no subspace isometric to l^∞.

THEOREM 1.90. *The following are equivalent*:

(i) *$M \notin \Delta_2$.*
(ii) *L_M has a subspace isometric to l^∞.*
(iii) *l^∞ is an almost isometric complemented copy of L_M (L_M^o).*
(iv) *c_0 is an almost isometric complemented copy of E_M (E_M^o).*
(v) *L_M has a subspace isomorphic to c_0.*

Proof. We only need to prove (v)⇒(i). If $M \in \Delta_2$, then by Theorem 1.58, L_M is weakly sequentially complete. Since c_0 is not weakly sequentially complete, it cannot be isomorphic to a subspace of L_M. ■

THEOREM 1.91. *If $M \notin \nabla_2$, then l^1 is an almost isometric complemented copy of E_M, E_M^o, L_M and L_M^o.*

Proof. Once more, we only deal with L_M and E_M. For given $\varepsilon \in (0,1)$, by Lemma 1.85, there exist $y_n = v_n \chi_{G_n}$, where $v_n > 0, \mu G_n > 0$ and $\{G_n\}$ are pairwise disjoint,

such that $\varrho_N(\sum_{n=1}^{\infty} y_n) \le \varepsilon$ and

$$\frac{1}{1+\varepsilon} \le \|y_n\|_N^o < \Big\| \sum_{n=1}^{\infty} y_n \Big\|_N^o < 1+\varepsilon.$$

Since $y_n \in E_N^o$, by Proposition 1.83, there exist $x_n = u_n \chi_{G_n}$ $(u_n > 0)$ such that $\|x_n\| = 1$ and $\|y_n\|_N^o = \langle x_n, y_n\rangle = u_n v_n \mu G_n$. Set $X = \{\sum_{n=1}^{\infty} \alpha_n x_n : (\alpha_n) \in l^1\}$. We claim that X is contained in E_M. Indeed, for any $x = \sum_{n=1}^{\infty} \alpha_n x_n \in X$,

$$\lim_m \Big\| \sum_{n=m}^{\infty} \alpha_n x_n \Big\| \le \lim_m \sum_{n=m}^{\infty} |\alpha_n| \cdot \|x_n\| = \lim_m \sum_{n=m}^{\infty} |\alpha_n| \to 0$$

as $m \to \infty$. In light of Theorem 1.27, we deduce $x \in E_M$.

Define $T : l^1 \to X$ by $T(\alpha_n) = \sum_{n=1}^{\infty} \alpha_n x_n$. Then

$$\|T(\alpha_n)\| = \Big\| \sum_{n=1}^{\infty} \alpha_n x_n \Big\| \le \sum_{n=1}^{\infty} |\alpha_n| \cdot |x_n\| = \|\alpha_n\|_1,$$

i.e., $\|T\| \le 1$. On the other hand, we have

$$\begin{aligned} \|T(\alpha_n)\| &= \Big\| \sum_{n=1}^{\infty} \alpha_n x_n \Big\| \ge \Big\langle \sum_{n=1}^{\infty} x_n, \frac{1}{1+\varepsilon} \sum_{n=1}^{\infty} y_n \operatorname{sign} \alpha_n \Big\rangle \\ &= \frac{1}{1+\varepsilon} \sum_{n=1}^{\infty} |\alpha_n| \cdot \|y_n\|_N^o \ge \frac{1}{(1+\varepsilon)^2} \|\alpha_n\|_1, \end{aligned} \tag{1.27}$$

i.e., $\|T^{-1}\| \le (1+\varepsilon)^2$.

It remains to show that X is a complemented subspace of both E_M and L_M. Define

$$Px = \sum_{n=1}^{\infty} \Big(\frac{1}{\mu G_n} \int_{G_n} x(t)\, dt \Big) \chi_{G_n} \qquad (x \in L_M).$$

By the proof of Theorem 1.87, P is a projection from L_M to L_M and X is contained in PE_M. Thus, to complete the proof, we only need to show that PL_M is contained in X.

For any $x \in L_M$, Px has the form $Px = \sum_{n=1}^{\infty} \alpha_n x_n$. Therefore, by (1.26) and (1.27),

$$\infty > \|x\| \ge \|Px\| = \Big\| \sum_{n=1}^{\infty} \alpha_n x_n \Big\| \ge \frac{1}{(1+\varepsilon)^2} \sum_{n=1}^{\infty} |\alpha_n|.$$

This ensures $(\alpha_n) \in l^1$, and so $Px \in X$. ∎

Now, we turn to the case where $M \in \nabla_2$. We start by introducing a general lemma.

LEMMA 1.92. *If $X = Y + Z$ contains a subspace isomorphic to c_0, then so does either Y or Z.*

Proof. Let $P : X \to Y$ be an isomorphism and $Te_n = y_n + z_n$, where $y_n \in Y$, $z_n \in Z$ and e_n is the natural basis of c_0. For any $(\varepsilon_n) \in \{-1, 1\}^{\mathbb{N}}$ and $m \in \mathbb{N}$,

$$\Big\| \sum_{n=1}^{m} \varepsilon_n y_n \Big\| = \Big\| \sum_{n=1}^{m} \varepsilon_n PTe_n \Big\| \le \|P\| \cdot \|T\|$$

and

$$\Big\|\sum_{n=1}^{m}\varepsilon_n z_n\Big\| = \Big\|\sum_{n=1}^{m}\varepsilon_n (I-P)Te_n\Big\| \le \|I-P\|\cdot\|T\|.$$

Hence, by the Kwapień Theorem (see Diestel [69], p. 254), if neither Y nor Z contains a subspace isomorphic to c_0, then $y_n \to 0$ and $z_n \to 0$. This cannot be true since

$$1 = \|e_n\| = \|T^{-1}(y_n+z_n)\| \le \|T^{-1}\|(\|y_n\|+\|z_n\|). \ \blacksquare$$

Since a Banach space X has a complemented subspace isomorphic to l^1 iff X^* has a subspace isomorphic to c_0, due to Lemma 1.92 and the fact that $L_M^* = L_N^o \oplus F$, we shall focus our attention on F.

THEOREM 1.93. *F has no subspace isomorphic to c_0.*

Proof. Suppose that $T : c_0 \to F_0 \subset F$ is an isomorphism and $Te_n = f_n$, $n \in \mathbb{N}$. We will find a contradiction. First, by Theorem 1.75, we may assume that each f_n is norm attainable.

Set $G_1^0 = G$. Then by Theorem 1.73, there exist $G_1^1, G_2^1 \in \Sigma$ such that $G_1^1 \cup G_2^1 = G_1^0, G_1^1 \cap G_2^1 = \emptyset$ and $f_1^+|_{G_1^0} = f_1|_{G_1^1}$, $-f_1^-|_{G_1^1} = f_1|_{G_2^1}$. Assume that $\{G_{2k}^m\}_{k=1}^{2^m}$, $m = 1,\ldots,n$, are found satisfying

$$\bigcup_{k\le 2^m} G_k^m = G, \quad G_i^m \cap G_j^m = \emptyset \quad (i,j \le 2^m, i \ne j), \quad G_{2k-1}^m \cup G_{2k}^m = G_k^{m-1} \tag{1.28}$$

and

$$f_m|_{G_{2k-1}^m} = f_m^+|_{G_k^{m-1}}, \qquad f_m|_{G_{2k}^m} = -f_m^-|_{G_k^{m-1}} \tag{1.29}$$

($k = 1,2,\ldots,2^m$, $m = 1,2,\ldots,n$). Then for each $k \le 2^n$, since $f_{n+1}|_{G_k^n}$ is norm attainable by Theorem 1.74, Theorem 1.73 allows us to find $G_{2k-1}^{n+1}, G_{2k}^{n+1} \in \Sigma$ such that

$$G_{2k-1}^{n+1} \cup G_{2k}^{n+1} = G_k^n, \qquad G_{2k-1}^{n+1} \cap G_{2k}^{n+1} = \emptyset$$

and

$$f_{n+1}|_{G_{2k-1}^{n+1}} = f_{n+1}^+|_{G_k^n}, \qquad f_{n+1}|_{G_{2k}^{n+1}} = -f_{n+1}^-|_{G_k^n}.$$

By induction, we can construct $\{G_k^n : k = 1,2,\ldots,2^n,\ n = 1,2,\ldots\}$ satisfying (1.28) and (1.29).

Let $\varepsilon_k^m = 1$ when $f_m|_{G_k^n} \in F^+$, and $= -1$ when $f_m|_{G_k^n} \in -F^+$, and set

$$\alpha_k^m = \varepsilon_k^m \|f_m|_{G_k^n}\| \qquad (n \in \mathbb{N},\ m \le n,\ k \le 2^n),$$
$$\alpha^m = (\alpha_1^m, \alpha_2^m, \ldots, \alpha_{2^m}^m, 0, 0, \ldots,) \qquad (m = 1,\ldots,n).$$

Then by Theorem 1.54,

$$\|\alpha^m\|_1 = \|f_m\| \ge \frac{1}{\|T^{-1}\|}\|T^{-1}f_m\|_\infty = \frac{1}{\|T^{-1}\|}.$$

Since l^1 has cotype 2, we can find $C > 0$ such that

$$2^{-n}\sum_{\theta_i=\pm1}\Big\|\sum_{i=1}^{n}\theta_i\alpha^i\Big\|_1 \ge C\Big[\sum_{i=1}^{n}\|\alpha^i\|_1^2\Big]^{1/2} \ge \frac{Cn^{1/2}}{\|T^{-1}\|}.$$

This enables us to find $\gamma_i = \pm 1$ $(i \le n)$ such that

$$\Big\|\sum_{i=1}^{n} \gamma_i \alpha^i\Big\|_1 \ge \frac{Cn^{1/2}}{\|T^{-1}\|} \qquad (n \in \mathbb{N}).$$

Set

$$I_k = \{i \le n : \gamma_i f_i|_{G_k^n} \in F^+\}, \qquad J_k = \{i \le n : -\gamma_i f_i|_{G_k^n} \in F^+\}.$$

Then

$$\begin{aligned}
\|T\| &\ge \Big\|T\Big(\sum_{i=1}^{n} \gamma_i e_i\Big)\Big\| = \Big\|\sum_{i=1}^{n} \gamma_i f_i\Big\| = \sum_{k=1}^{2^n} \Big\|\sum_{i=1}^{n} \gamma_i f_i|_{G_k^n}\Big\| \\
&\ge \sum_{k=1}^{2^n} \Big|\Big\|\sum_{i\in I_k} \gamma_i f_i|_{G_k^n}\Big\| - \Big\|\sum_{i\in J_k} \gamma_i f_i|_{G_k^n}\Big\|\Big| \\
&\ge \sum_{k=1}^{2^n} \Big|\sum_{i\in I_k} \|f_i|_{G_k^n}\| - \sum_{i\in J_k} \|f_i|_{G_k^n}\|\Big| = \sum_{k=1}^{2^n} \Big|\sum_{i=1}^{n} \gamma_i \varepsilon_k^i \|f_i|_{G_k^n}\|\Big| \\
&= \sum_{k=1}^{2^n} \Big|\sum_{i=1}^{n} \gamma_i \alpha_k^i\Big| = \Big\|\sum_{i=1}^{n} \gamma_i \alpha^i\Big\|_1 \ge \frac{Cn^{1/2}}{\|T^{-1}\|} \to \infty.
\end{aligned}$$

This contradiction completes the proof. ∎

Summing up the above results, we get

THEOREM 1.94. *The following are equivalent*:

(i) $M \notin \nabla_2$.
(ii) l^1 *is a complemented copy of* L_M (E_M).
(iii) l^1 *is an almost isometric complemented copy of* L_M $(L_M^o,\ E_M,\ E_M^o)$.

COROLLARY 1.95. L_M *has a subspace isomorphic to* l^1 *iff it is not reflexive.*

Proof. The necessity is a general result of Banach space theory, and the sufficiency follows from Corollary 1.46, Theorem 1.90, 1.94 and the fact that l^∞ has a subspace isometric to l^1. ∎

1.9. Basis

THEOREM 1.96. (i) *The natural basis* $\{e_i\}$ *is an unconditional symmetric basis of* h_M.
(ii) *The natural basis* $\{e_i\}$ *is a bounded complete basis of* l_M *iff* $M \in \Delta_2$.

Proof. (i) For any $x = \sum a_i e_i \in h_M$, as in the proof of Theorem 1.27, we have $\lim_n \|\sum_{i=n}^{\infty} a_i e_i\| = 0$. This shows that $\{e_i\}$ is a basis of h_M, and it is obvious that $\{e_i\}$ is an unconditional symmetric basis of h_M.

(ii) If l_M has a basis, then it has no copy isometric to l^∞. This is equivalent to the condition $M \in \Delta_2$ according to the proof of Theorem 1.89.

On the other hand, if $M \in \Delta_2$, then by (i), $\{e_i\}$ is a symmetric basis of l_M. Assume that $\sup \|\sum_{i=1}^{n} a_i e_i\| \le 1$. Then $\sup \sum_{i=1}^{n} M(a_i) \le 1$, so $\sum_{i=1}^{\infty} M(a_i) \le 1$. It follows that $\{a_i\} \in l_M$, and hence, $\{e_i\}$ is a bounded complete basis of l_M. ∎

Next, we discuss the existence of a basis in L_M and E_M. Since $L_M(G)$ and $L_M([0,\mu G])$ are linearly isometric, without loss of generality, we may assume that $G=[0,1]$.

THEOREM 1.97. *The Haar system $\{h_i\}$ is a basis of E_M.*

Proof. Recall that the Haar system $\{h_i\}$ consists of the functions $x_0^0(t)\equiv 0$ and

$$x_0^1(t)=\begin{cases}1, & 0\le t<1/2,\\ -1, & 1/2<t\le 1,\\ 0, & t=1/2,\end{cases}$$

$$x_n^k(t)=\begin{cases}2^{n/2}, & 2^{-n-1}(2k-2)\le t<2^{-n-1}(2k-1),\\ -2^{n/2}, & 2^{-n-1}(2k-1)\le t<2^{-n-1}(2k),\\ 0, & \text{otherwise},\end{cases}$$

for $n\in\mathbb{N}$ and $k\le 2^n$. For each integrable function $u(t)$ on $[0,1]$, we define

$$c_i=\int_0^1 u(t)h_i(t)\,dt,\quad S_m u(t)=\sum_{i=1}^m c_i h_i(t)\quad (i,m\in\mathbb{N}).$$

For fixed $m\in\mathbb{N}$, let $a,b\in[0,1]$ be two discontinuity points of some $h_i(t)$ $(i\le m)$ but each $h_i(t)$ $(i\le m)$ is continuous on (a,b). Then it is directly calculated that for any integrable function $u(t)$ on $[a,b]$,

$$S_m u(t)=\frac{1}{b-a}\int_a^b u(s)\,ds\qquad (a<t<b).$$

Hence, by the Jensen Inequality, $M(S_m u(t))\le M(u(t))$ except for finitely many points at which h_i is discontinuous for some $i\le m$. This shows that the norm of the operator $S_m: L_M\to L_M$ is no more than one. Since for every $x\in C[0,1]$, $S_m x$ is uniformly convergent to x, it follows from Theorem 1.25 that for every $u\in E_M$, $\{S_m u\}$ converges to u in L_M. This proves that $\{h_i\}$ is a basis of E_M. ■

THEOREM 1.98. *The Haar system $\{h_i\}$ is an unconditional basis of L_M iff L_M is reflexive, i.e., $M\in\Delta_2\cap\nabla_2$.*

To prove the theorem, we introduce the following two lemmas.

We say that a Banach space X of measurable functions on $[0,1]$ is *symmetric* if (i) $x,y\in X$ and $|x(t)|\le|y(t)|$ imply $\|x\|\le\|y\|$, and (ii) if $x\in X$ and $|y(t)|,|x(t)|$ are equi-measurable, then $y\in X$ and $\|y\|=\|x\|$.

LEMMA 1.99. *The Haar system $\{h_i\}$ is an unconditional basis of a separable symmetric Banach space X of functions on $[0,a]$ containing $\chi_{[0,s]}$ for all $s\in[0,a]$ iff*

$$1<\liminf_{s\to 0}\frac{F(2s)}{F(s)}\le\limsup_{s\to 0}\frac{F(2s)}{F(s)}<2,\tag{1.30}$$

where $F(s)=\|\chi_{[0,s]}\|$.

Proof. See E. M. Semenov [207]. ■

Let

$$\alpha_M(l)=\liminf_{u\to\infty}\frac{M^{-1}(u)}{M^{-1}(lu)},\qquad \beta_M(l)=\limsup_{u\to\infty}\frac{M^{-1}(u)}{M^{-1}(lu)}.\tag{1.31}$$

Then $\alpha_M(l) \le \beta_M(1) \le 1$ for all $l \ge 1$. Moreover, set $\alpha_l(u) = M^{-1}(u)/M^{-1}(lu)$. Then from

$$u = M(\alpha_l(u)M^{-1}(lu)) \le \alpha_l(u)M(M^{-1}(lu)) = lu\alpha_l(u)$$

we deduce that $\alpha_l(u) \ge 1/l$ $(l \ge 1)$, whence

$$1/l \le \alpha_M(l) \le \beta_M(l) \le 1. \tag{1.32}$$

LEMMA 1.100. *The following are equivalent*:

(1) $M \in \Delta_2$.

(2) *For any* $v_0 > 0$ *and* $l > 1$, *there exists* $k > 1$ *such that*

$$N(v) \ge lN\left(\frac{k}{l}v\right) \qquad (v > v_0). \tag{1.33}$$

(3) *There exist* $v_0 > 0$, $l > 1$ *and* $k > 1$ *such that* (1.33) *holds.*

(4) $\alpha_N(l) > 1/l$ *for all* $l > 1$.

(5) $\alpha_N(l) > 1/l$ *for some* $l > 1$.

(6) $\beta_M(l) < 1$ *for all* $l > 1$.

(7) $\beta_M(l) < 1$ *for some* $l > 1$.

Proof. (1)⇒(2). Given $v_0 > 0$ and $l > 1$, pick $u_0 > 0$ such that $q(v_0/l) > u_0$. By (1.12), we can find $k > 1$ such that $M(ku) \le lM(u)$ for all $u \ge u_0$. Then it follows from Examples 1.8 and 1.9 that

$$N(v/k) \ge lN(v/l) \qquad (q(v/l) > u_0).$$

Replace v by kv to get (1.33).

(2)⇒(3) is trivial.

(3)⇒(1) is a direct consequence of Examples 1.8, 1.9 and Theorem 1.13.

(2)⇒(4). For any $v_0 > 0$ and $l > 1$, pick $k > 1$ satisfying (1.33). Define $\beta_l(v) = N^{-1}(v)/N^{-1}(lv)$. Then by (1.33),

$$lv = N\left(\frac{N^{-1}(v)}{\beta_l(v)}\right) \ge lN\left(\frac{k}{l}\frac{N^{-1}(v)}{\beta_l(v)}\right)$$

for all large v. Since N is increasing, we must have $\beta_l(v) \ge k/l$ for all large v, and hence, $\alpha_M(l) \ge k/l > 1/l$.

(4)⇒(5). Trivial.

(5)⇒(3). If (3) fails, then for any $l > 1$ and $1 < k_n \downarrow 1$, there exist $v_n \to \infty$ such that

$$N(v_n) < lN\left(\frac{k_n}{l}v_n\right).$$

Set $N(v_n) = lw_n$. Then the above inequality is nothing but

$$w_n < N\left(\frac{k_n}{l}N^{-1}(lw_n)\right), \quad \text{i.e.,} \quad N^{-1}(w_n) < \frac{k_n}{l}N^{-1}(lw_n).$$

This yields $1/l \le \alpha_N(l) \le \lim k_n/l = 1/l$.

(1)⇒(6). Again, define $\alpha_l(u) = M^{-1}(u)/M^{-1}(lu)$. Then by (1.12), for any $l > 1$, there exists $k > 1$ such that $M(ku) \le lM(u)$ for all large u. Therefore, for all large u,

$$u = (1/l)lM(\alpha_l(u)M^{-1}(lu)) \ge (1/l)M(k\alpha_l(u)M^{-1}(lu))$$

and hence, from the fact that M is increasing, we deduce that $k\alpha_l(u) \le 1$. This yields $\beta_M(l) \le 1/k < 1$.

(6)⇒(7) is obvious.

(7)⇒(1). If (1) does not hold, then by (1.11), for any $l > 1$ and $1 < k_n \downarrow 1$, there exist $u_n \to \infty$ such that $M(k_n u_n) > lM(u_n), n \in \mathbb{N}$. Set $M(u_n) = w_n$. Then the inequality becomes $M(k_n M^{-1}(w_n)) > lw_n$, i.e.,

$$k_n M^{-1}(w_n) > M^{-1}(lw_n).$$

Letting $n \to \infty$, we find $1 \ge \beta_M(l) \ge \lim_n 1/k_n = 1$. ■

Proof of Theorem 1.98. Since for any $E \in \Sigma$ with positive measure, $\|\chi_E\| = [M^{-1}(1/\mu E)]^{-1}$, we can easily deduce that (1.30) is equivalent to $1/2 < \alpha_M(2) \le \beta_M(2) < 1$. Therefore, the conclusion of Theorem 1.98 follows from Lemmas 1.99 and 1.100. ■

Notes and remarks. Most of the material in the first four sections is selected from C. Wu, T. Wang, S. Chen & Y. Wang [295], C. Wu & T. Wang [291], and M. A. Krasnosel'skiĭ & Ya. B. Rutickiĭ [154] while Propositions 1.32 and 1.33 are from S. Chen & M. Wisła [50]. It is worth mentioning that Theorem 1.31 obtained by C. Wu, S. Zhao & J. Chen [296] plays a big role in the geometry of Orlicz spaces. Furthermore, the author [12] gives Theorem 1.35 which is also quite useful. The powerful Lemma 1.40 was first obtained by A. Kamińska [136], and from it, S. Chen & Y. Wang [47] obtained Theorem 1.41 (the short proof in this book is due to the author).

In §1.5, Theorems 1.45–1.51 are taken from T. Ando [4], Theorems 1.52–1.54 can be found in S. Chen, H. Hudzik & H. Sun [33] while Theorems 1.55 and 1.56 are due to the author.

In §1.6, Theorem 1.57 comes from Y. Wang [264], Theorem 1.59 was first obtained by C. Wu, Theorems 1.61–1.63 were chosen from T. Ando [5] and Y. Wu [297]. Recently, S. Chen & H. Sun [40] and S. Chen, H. Hudzik & H. Sun [33] investigated the general weak convergence and weak compactness, and obtained Theorems 1.65–1.75 which complete the discussion of this topic.

Many mathematicians including T. Wang, Y. Wang, Y. Ye, H. Hudzik, S. Chen considered the norm attainability for different purposes. Here, Theorem 1.76–Corollary 1.82 were proved by S. Chen, A. Kamińska & H. Hudzik [32], and Propositions 1.83 and 1.84 were given by H. W. Milnes [181] and S. Chen [13].

S. Chen, H. Hudzik & H. Sun [33] deals with the problem of isomorphic subspaces and finds all the results of §1.8.

The theory of bases is of course a very important topic. Here, in §1.9, we only give a brief investigation about the existence of bases in Orlicz spaces, and all the material in this section is due to Z. Ren except Lemma 1.100 which is revised by the author while preparing the book.

2. Convexity and smoothness

2.1. Extreme points and rotundity. Let us recall some geometrical concepts first. Consider a convex subset A of a Banach space X. A point $x \in A$ is called an *extreme point* of A if $2x = y + z$ and $y, z \in A$ imply $y = z$. Moreover, if $x \in A, y_n + z_n = 2x$ and $d(y_n, A) \to 0, d(z_n, A) \to 0$ imply $\|y_n - z_n\| \to 0$ as $n \to \infty$, then x is called a *strongly extreme point* of A. The set of all extreme points of A is denoted by $\operatorname{Ext} A$. If $\operatorname{Ext} B(X) = S(X)$, then X is called a *rotund* (R) *space*. If the set of all strongly extreme points of $B(X)$ is equal to $S(X)$, then X is called a *mid-point locally uniformly rotund* (MLUR) space.

Let M be an Orlicz function. An interval $[a, b]$ is called a *structural affine interval* of M, or simply, SAI of M, provided that M is affine on $[a, b]$ and it is not affine on either $[a - \varepsilon, b]$ or $[a, b + \varepsilon]$ for any $\varepsilon > 0$. Let $\{[a_i, b_i]\}_i$ be all the SAIs of M. We call

$$S_M = \mathbb{R} \setminus \Big[\bigcup_i (a_i, b_i)\Big]$$

the set of *strictly convex points* of M. Clearly, if $u, v \in \mathbb{R}$, $\alpha \in (0, 1)$ and $\alpha u + (1 - \alpha)v \in S_M$, then

$$M(\alpha u + (1 - \alpha)v) < \alpha M(u) + (1 - \alpha)M(v). \tag{2.1}$$

Furthermore, $0 \in S_M$ since $M(u) > 0$ iff $u \neq 0$. If we recall Definition 1.5 (3), we find that S_M contains infinitely many points near origin and infinity.

THEOREM 2.1. *$x \in \operatorname{Ext} B(L_M)$ iff* (i) *$\varrho_M(x) = 1$ and* (ii) *$\mu\{t \in G : x(t) \notin S_M\} = 0$.*

Proof. *Sufficiency.* Suppose $y, z \in B(L_M)$ and $y + z = 2x$. We have to show $y = z$. Since the convexity of M implies

$$\begin{aligned} 1 = \varrho_M(x) &= \int_G M\left(\frac{y(t) + z(t)}{2}\right) dt \le \int_G \frac{M(y(t)) + M(z(t))}{2}\, dt \\ &= \frac{1}{2}[\varrho_M(y) + \varrho_M(z)] \le 1, \end{aligned}$$

again by the convexity of M,

$$M(x(t)) = M\left(\frac{y(t) + z(t)}{2}\right) = \frac{1}{2}[M(y(t)) + M(z(t))] \qquad \mu\text{-a.e.}$$

But $\mu\{t \in G : x(t) \notin S_M\} = 0$, and so by (2.1), $x(t) = y(t) = z(t)$ μ-a.e., i.e., $x = y = z$.

Necessity. Let $x \in \operatorname{Ext} B(L_M)$. If $\varepsilon = 1 - \varrho_M(x) > 0$, then we can choose $E \in \Sigma$ such that

$$0 < \int_E M(2x(t))\, dt \le \varepsilon.$$

Define

$$(y(t), z(t)) = \begin{cases} (x(t), x(t)), & t \in G \setminus E, \\ (0, 2x(t)), & t \in E. \end{cases}$$

Then $y \neq z, y + z = 2x$ and

$$\varrho_M(y) < \varrho_M(z) < \varrho_M(x) + \varepsilon = 1,$$

a contradiction to $x \in \operatorname{Ext} B(L_M)$.

Next, we assume $\mu\{t \in G : x(t) \notin S_M\} > 0$. Since $\mathbb{R} \setminus S_M$ is the union of at most countably many open intervals, there exists an interval (a, b) such that

$$\mu\{t \in G : x(t) \in (a + \varepsilon, b - \varepsilon)\} > 0 \qquad (\varepsilon > 0)$$

and that M is affine on $[a, b]$: $M(u) = ku + \beta$ for $u \in [a, b]$. Divide the set $\{t \in G : x(t) \in (a + \varepsilon, b - \varepsilon)\}$ into two sets A and B with $\mu A = \mu B$ and let

$$(y(t), z(t)) = \begin{cases} (x(t), x(t)), & t \in G \setminus (A \cup B), \\ (x(t) - \varepsilon, x(t) + \varepsilon), & t \in A, \\ (x(t) + \varepsilon, x(t) - \varepsilon), & t \in B. \end{cases}$$

Then $y \neq z$, $y + z = 2x$ and through an easy calculation, we find $\varrho_M(y) = \varrho_M(z) = \varrho_M(x) = 1$, also a contradiction. ∎

THEOREM 2.2. *L_M is rotund iff* (i) *$M \in \Delta_2$ and* (ii) *M is strictly convex.*

Proof. $\Leftarrow$ For any $x \in S(L_M)$, by (i) and Theorem 1.39, $\varrho_M(x) = 1$. Moreover, since (ii) means $S_M = \mathbb{R}$, it follows by Theorem 2.1 that $x \in \operatorname{Ext} B(L_M)$.

$\Rightarrow$ The necessity of (i) follows from Example 1.19 and Theorem 2.1. If (ii) does not hold, there exists $a \in \mathbb{R} \setminus S_M$. Choose $E \in \Sigma$ such that $M(a)\mu E \leq 1$ and $0 < \mu E < \mu G$, and let b satisfy $M(b)\mu(G \setminus E) = 1 - M(a)\mu E$. Then the point $x = a\chi_E + b\chi_{G\setminus E} \in S(L_M)$ and $x \notin \operatorname{Ext} B(L_M)$ by Theorem 2.1. ∎

THEOREM 2.3. *$x \in S(L_M^o)$ is an extreme point of $B(L_M^o)$ iff $\mu\{t \in G : kx(t) \in \mathbb{R} \setminus S_M\} = 0$ for any $k \in K(x)$. Consequently, $K(x)$ is a singleton in this case by its definition.*

Proof. $\Rightarrow$ Suppose $\mu\{t \in G : kx(t) \in \mathbb{R} \setminus S_M\} > 0$ for some $k \in K(x)$. Then in the same way as in the proof of Theorem 2.1, we can construct $y, z \in L_M$, $y \neq z$, such that $y + z = 2x$ and

$$\int_G M(ky(t))\,dt = \int_G M(kz(t))\,dt = \int_G M(kx(t))\,dt.$$

Hence,

$$\|y\|^o \leq k^{-1}[1 + \varrho_M(ky)] = k^{-1}[1 + \varrho_M(kx)] = \|x\|^o = 1$$

and similarly, $\|z\|^o \leq 1$. This shows $x \notin \operatorname{Ext} B(L_M^o)$.

$\Leftarrow$ Let $y, z \in B(L_M^o)$ satisfy $y + z = 2x$. We should show $y = z$. Take $k' \in K(y), k'' \in K(z)$ and define $k = k'k''/(k' + k'')$. Then by the convexity of M and Theorem 1.30,

$$\begin{aligned} 2 = \|y\|^o + \|z\|^o &= \frac{k' + k''}{k'k''}\left[1 + \frac{k''}{k' + k''}\varrho_M(k'y) + \frac{k'}{k' + k''}\varrho_M(k''z)\right] \\ &\geq \frac{1}{k}[1 + \varrho_M(ky + kz)] = 2\frac{1}{2k}[1 + \varrho_M(2kx)] \geq 2\|x\|^o = 2. \end{aligned}$$

This implies

$$\|x\|^o = 1 = \frac{1}{2k}[1 + \varrho_M(2kx)]$$

(i.e., $2k \in K(x)$) and

$$\frac{k''}{k'+k''}M(k'y(t)) + \frac{k'}{k'+k''}M(k''z(t)) = M(2kx(t)) \qquad \mu\text{-a.e.}$$

Hence, $\mu\{t \in G : 2kx(t) \in \mathbb{R} \setminus S_M\} = 0$, and so $k'y(t) = k''z(t) = 2kx(t)$ μ-a.e. It follows that $k' = \|k'y\|^o = \|k''z\|^o = k''$. Thus, $x = y = z$. ■

THEOREM 2.4. *L_M^o is rotund iff M is strictly convex.*

Proof. $\Leftarrow$ Trivial by Theorem 2.3.

$\Rightarrow$ If M is not strictly convex, then there exists $a \in \mathbb{R} \setminus S_M$ $(a > 0)$. Choose $A \in \Sigma$ such that $0 < \mu A < \mu G$ and that $N(p(a))\mu A \le 1$. Let $b > 0$ satisfy $N(p(b))\mu(G \setminus A) \ge 1$. Then there exists $B \subset G \setminus A$ such that

$$N(p(a))\mu A + N(p(b))\mu B = 1.$$

Define $x = a\chi_A + b\chi_B$. Then $\varrho_N(p(x)) = 1$ and so $\|x\|^o \in K(x/\|x\|^o)$. But

$$\mu\left\{t \in G : \|x\|^o \frac{x(t)}{\|x\|^o} \in \mathbb{R} \setminus S_M\right\} \ge \mu A > 0,$$

hence we deduce by Theorem 2.3 that $x/\|x\|^o \notin \operatorname{Ext} B(L_M^o)$. ■

COROLLARY 2.5. *For any $\varepsilon > 0$, L_M^o has a rotund Orlicz norm $\|\cdot\|_{M_1}^o$ satisfying*

$$\|x\|_M^o \le \|x\|_{M_1}^o \le (1+\varepsilon)\|x\|_M^o \qquad (x \in L_M).$$

Moreover, if $M \in \Delta_2$, then L_M has a rotund Luxemburg norm $\|\cdot\|_{M_2}$ such that

$$\|x\|_M \le \|x\|_{M_2} \le (1+\varepsilon)\|x\|_M \qquad (x \in L_M)$$

and such that its dual is also rotund.

Proof. Direct consequences of Theorem 1.16, Lemma 1.28, Proposition 1.42 and Theorems 2.2 and 2.4. ■

Now, we turn to Orlicz sequence spaces. We also write $l_M = (l_M, \|\cdot\|)$, $l_M^o = (l_M, \|\cdot\|^o)$, $h_M = (h_M, \|\cdot\|)$ and $h_M^o = (h_M, \|\cdot\|^o)$.

THEOREM 2.6. *$x = (x(i))_i \in \operatorname{Ext} B(l_M)$ iff* (i) *$\varrho_M(x) = 1$ and* (ii) *$\mu\{i : x(i) \in \mathbb{R} \setminus S_M\} \le 1$.*

Proof. $\Leftarrow$ Let $y + z = 2x$, $y, z \in B(l_M)$. Since

$$1 = \varrho_M(x) = \varrho_M\left(\frac{y+z}{2}\right) \le \frac{1}{2}[\varrho_M(y) + \varrho_M(z)] \le 1,$$

we have

$$M\left(\frac{y(i)+z(i)}{2}\right) = \frac{1}{2}[M(y(i)) + M(z(i))]$$

for all $i \in \mathbb{N}$. By (ii), there exists at most one $j \in \mathbb{N}$ such that $x(j) \in \mathbb{R} \setminus S_M$. Hence, (2.1) implies $x(i) = y(i) = z(i)$ for all $i \ne j$. Since $\sum_i M(y(i)) = 1 = \sum_i M(z(i))$, we deduce $|y(j)| = |z(j)|$. But $y(j), z(j), x(j)$ are in the same SAI of M and $0 \in S_M$, so we must have $y(j) = z(j) = x(j)$. Hence, $y = z = x$.

$\Rightarrow$ $\varrho_M(x) = 1$ can be proved as in the proof of Theorem 2.1. If (ii) is not true, then we may assume $x(1), x(2) \in \mathbb{R} \setminus S_M$, i.e., $x(1)$, $x(2)$ belong to some affine intervals $(a_1, b_1), (a_2, b_2)$ of M respectively.

Let $M(u) = k_i u + \beta_i$, $u \in (a_i, b_i)$ $(i = 1, 2)$. Then by the definition of Orlicz functions, $k_i > 0$, $i = 1, 2$. Select $\varepsilon_1, \varepsilon_2 > 0$ such that $k_1\varepsilon_1 = k_2\varepsilon_2$ and that $x(i) + \varepsilon_i \in (a_i, b_i)$ $(i = 1, 2)$. Define $y = (y(i))_i$, $z = (z(i))_i$ by $y(1) = x(1) + \varepsilon_1$, $y(2) = x(2) - \varepsilon_2$, $y(i) = x(i)$ $(i \geq 3)$, $z(i) = 2x(i) - y(i)$ $(i \in \mathbb{N})$. Then $y \neq z$ and $\varrho_M(y) = \varrho_M(z) = \varrho_M(x) \leq 1$. This contradicts the hypothesis $x \in \operatorname{Ext} B(l_M)$. ∎

THEOREM 2.7. *l_M is rotund iff* (i) *$M \in \Delta_2$ and* (ii) *M is strictly convex on* $[0, M^{-1}(1/2)]$.

Proof. $\Leftarrow$ For any $x \in S(l_M)$, by (i), $\varrho_M(x) = 1$. Let $I = \{i \in \mathbb{N} : x(i) \in \mathbb{R} \setminus S_M\}$. Then by (ii), for any $i \in I, |x(i)| > M^{-1}(1/2)$. Hence, I contains at most a single point. This yields that $x \in \operatorname{Ext} B(l_M)$ by Theorem 2.6.

$\Rightarrow$ If $M \notin \Delta_2$, then as in Example 1.19, we can construct $x \in l_M$ such that $\|x\| = 1$ and $\varrho_M(x) < 1$, whence, $x \notin \operatorname{Ext} B(l_M)$.

If (ii) does not hold, then M is affine on some interval $[a, b]$ in $[0, M^{-1}(1/2)]$. Since $2M(b) \leq 1$, we can find $c \in (a, b)$ and $d > 0$ such that $2M(c) + M(d) = 1$. Define $x = (c, c, d, 0, 0, \ldots)$. Then $\varrho_M(x) = 1$ and by Theorem 2.6, $x \notin \operatorname{Ext} B(l_M)$. ∎

THEOREM 2.8. *$x = (x(i))_i \in S(l_M^o)$ is an extreme point of $B(l_M^o)$ iff* (i) *$I = \{i \in \mathbb{N} : x(i) \neq 0\}$ is a singleton or* (ii) *for any $k \in K(x)$ and any $i \in \mathbb{N}$, $kx(i) \in S_M$.*

Proof. $\Leftarrow$ If (ii) is true, then with the same method as in the proof of Theorem 2.3, we can show $x \in \operatorname{Ext} B(l_M^o)$.

Now we assume $x = (0, 0, \ldots, x(i), 0, 0, \ldots)$. Then for any $y, z \in B(l_M^o)$ with $y + z = 2x$, as in the proof of Theorem 2.3, we find that for each $i \in \mathbb{N}$, $k'y(i)$, $k''z(i)$ and $2kx(i)$ are in the same SAI of M, where $k' \in K(y), k'' \in K(z)$ and $k = k'k''/(k' + k'')$. Since $0 \in S_M$, we find $y(j) = z(j) = 0$ for all $j \neq i$. It follows from $\|y\|^o = \|z\|^o = \|x\|^o = 1$ that $|y(i)| = |z(i)| = |x(i)|$, and so $y(i) = z(i) = x(i)$.

$\Rightarrow$ Suppose that both (i) and (ii) are false. Without loss of generality, we may assume that $x(1) > 0, x(2) > 0$ and that there exists $k \in K(x)$ such that $M(u) = au + b$ on $[(k - \varepsilon)x(1), (k + \varepsilon)x(1)]$ for some $\varepsilon > 0$. By the definition of $K(\cdot)$,

$$1 \geq \sum_i N(p((k - \varepsilon)|x(i)|)) > N(p((k - \varepsilon)|x(1)|)) = N(a),$$

i.e., $a < N^{-1}(1)$. Let $\{e_i\}_i$ be the natural basis of l^1. Then by Example 1.22, $\|e_i\|^o = N^{-1}(1)$. Therefore,

$$1 = \|x\|^o = \Big\| \sum_i x(i)e_i \Big\|^o > \|x(1)e_1\|^o = x(1)N^{-1}(1).$$

This implies $ax(1) < 1$. Therefore, since

$$1 = \|x\|^o = k^{-1}[1 + \varrho_M(kx)] = k^{-1}\Big[1 + \sum_{i \geq 2} M(kx(i)) + akx(1) + b\Big],$$

we have

$$k = \frac{1 + b + \sum_{i\ge 2} M(kx(i))}{1 - ax(1)}.$$

Define

$$k_1(u) = \frac{1 + b + \sum_{i\ge 2} M(kx(i))}{1 - au}, \qquad k_2(u) = \frac{1 + b + \sum_{i\ge 2} M(kx(i))}{1 - 2ax(1) + au}.$$

Then $k_1(u), k_2(u) \to k$ as $u \to x(1)$. This allows us to find $y(1) > x(1)$ close enough to $x(1)$ such that

$$k_1(y(1))y(1), k_2(y(1))[2x(1) - y(1)] \in [(k - \varepsilon/2)x(1), (k + \varepsilon/2)x(1)]. \tag{2.2}$$

Now, we define

$$k_1 = k_1(y(1)), \quad k_2 = k_2(y(1)), \quad z(1) = 2x(1) - y(1),$$
$$y(i) = \frac{k}{k_1}x(i), \quad z(i) = \frac{k}{k_2}x(i) \quad (i \ge 2).$$

Then $y = (y(i))_i \ne z = (z(i))_i$ since $y(1) - z(1) = 2[y(1) - x(1)] > 0$. Moreover, observing that

$$\frac{1}{k_1} + \frac{1}{k_2} = \frac{2[1 - ax(1)]}{1 + b + \sum_{i\ge 2} M(kx(i))} = \frac{2}{k},$$

we find

$$\frac{y(i) + z(i)}{2} = \frac{k}{2}\left(\frac{1}{k_1} + \frac{1}{k_2}\right)x(i) = x(i) \qquad (i \ge 2),$$

i.e., $2x = y + z$. We finish the proof by showing $\|y\|^o \le 1$ and $\|z\|^o \le 1$. In fact, by the definition of k_1,

$$k_1 - ak_1y(1) = 1 + b + \sum_{i\ge 2} M(kx(i)).$$

Hence, by (2.2),

$$1 = \frac{1}{k_1}[1 + \varrho_M(k_1y)] \ge \|y\|^o.$$

Similarly, we have $\|z\|^o \le 1$. ■

THEOREM 2.9. *l_M^o is rotund iff M is strictly convex on $[0, \pi_M(1)]$, where*

$$\pi_M(\alpha) = \inf\{t > 0 : N(p(t)) \ge \alpha\}.$$

Proof. $\Leftarrow$ For any $x = (x(i))_i \in S(l_M^o)$, if x has only one nonzero coordinate, then $x \in \operatorname{Ext} B(l_M^o)$ by Theorem 2.8. Otherwise, for any $i \in \mathbb{N}$, $k \in K(x)$ and $\varepsilon \in (0, k)$, we have $N(p((k - \varepsilon)|x(i)|)) \le 1$. Therefore, $(k - \varepsilon)|x(i)| \le \pi_M(1)$, and thus, $kx(i) \in S_M$. Consequently, by Theorem 2.8, $x \in \operatorname{Ext} B(l_M^o)$.

$\Rightarrow$ If M is not strictly convex on $[0, \pi_M(1)]$, then there exists $a \in (0, \pi_M(1))$ and $a \in \mathbb{R} \setminus S_M$. Clearly, $N(p(a)) < 1$, and so,

$$b = \sup\{u : N(p(a)) + N(p(u)) \le 1\} > 0.$$

Define

$$k = 1 + M(a) + M(b), \qquad x = k^{-1}(a, b, 0, 0, \ldots).$$

Then by the definition of b, $k \in K(x)$ and hence,

$$\|x\|^o = k^{-1}[1 + M(a) + M(b)] = 1.$$

By applying Theorem 2.8, we find $x \notin \operatorname{Ext} B(l_M^o)$. ■

REMARK. From the proof of Theorems 2.2 and 2.7, it is easy to see that:

(i) E_M is rotund iff M is strictly convex.
(ii) h_M is rotund iff M is strictly convex on $[0, M^{-1}(1/2)]$.
(iii) E_M^o (or h_M^o) is rotund iff L_M^o (or l_M^o) is rotund.

Y. Cui & T. Wang [59] investigated the strongly extreme points of Orlicz spaces. We mention the results below without proofs.

THEOREM 2.10. *Let $B = B(L_M), B(L_M^o), B(L_M)$ or $B(l_M^o)$.*

(i) *If $M \notin \Delta_2$, then B has no strongly extreme points.*
(ii) *If $M \in \Delta_2$, then $x \in B$ with norm one is a strongly extreme point of B iff it is an extreme point of B.*

A Banach space X is called a *k-rotund* ($k \geq 1$) (k-R) space provided that $\|x_i\| = 1$ ($i = 1, \ldots, k+1$) and $\|x_1 + \ldots + x_{k+1}\| = k+1$ implies that $\{x_i\}_{i \leq k+1}$ are linearly dependent.

THEOREM 2.11. (i) *L_M (or L_M^o) is k-rotund iff it is rotund.*
(ii) *l_M is k-rotund iff $M \in \Delta_2$ and M is strictly convex on $[0, M^{-1}(1/(k+1))]$.*
(iii) *l_M^o is k-rotund iff M is strictly convex on $[0, \pi_M(1/k)]$.*

Proof. We only prove (ii), the most difficult one, and leave the others to the reader.

Suppose that M is not strictly convex on $[0, \pi_M(1/k)]$, i.e., there exists $[a, b]$ contained in $(0, \pi_M(1/k))$ such that $M(u) = \alpha u + \beta$ on $[a, b]$. Arbitrarily pick $c \in (a, b)$. Then $0 < c < \pi_M(1/k)$ implies $N(\alpha) = N(p(c)) < 1/k$. Hence,

$$t = \sup\{s : kN(\alpha) + N(p(s)) \leq 1\} > 0. \tag{2.3}$$

Let $h = 1 + kM(c) + M(t)$ and define $x = (x(i))_i$ by $x(i) = c/h$ ($1 \leq i \leq k$), $x(k+1) = t/h$ and $x(i) = 0$ for $i > k+1$. By (2.3), we have $h \in K(x)$, and thus,

$$\|x\|^o = h^{-1}[1 + \varrho_M(hx)] = 1.$$

Therefore, $M(c) = \alpha c + \beta$ implies

$$h = 1 + k\alpha c + k\beta + M(t).$$

Moreover, from Example 1.22 and the inequality $N(\alpha) < 1/k$, we deduce that

$$1 = \|x\|^o > \left\| \frac{c}{h}(e_1 + \ldots + e_k) \right\|^o = \frac{kc}{h} N^{-1}(1/k) > \frac{\alpha k c}{h}.$$

This allows us to write

$$h = \frac{1 + k\beta + M(t)}{1 - \alpha c k/h}.$$

Consider the continuous functions

$$k'(s) = \frac{1 + k\beta + M(t)}{1 - k\alpha s}, \qquad k''(s) = \frac{1 + k\beta + M(t)}{1 - (k-1)\alpha c/h - \alpha s}.$$

Clearly, $k'(s), k''(s) \to h$, and so $sk'(s), sk''(s) \to c$ as $s \to c/h$. Hence, there exists $\delta > 0$ such that

$$(c/h - \delta)k'(c/h - \delta) \in (a, b), \qquad (c/h + \delta)k''(c/h + \delta) \in (a, b).$$

Let $k' = k'(c/h - \delta), k'' = k''(c/h + \delta)$ and define

$$\begin{aligned} x_1 &= (c/h - \delta)(e_1 + \ldots + e_k) + (t/k')e_{k+1}, \\ x_i &= (c/h + \delta)e_{i-1} + (c/h) \sum_{\substack{1 \le j \le k \\ j \ne i-1}} e_j + (t/k'')e_{k+1} \qquad (i = 2, \ldots, k+1). \end{aligned}$$

Clearly, $\{x_i\}_{i \le k+1}$ are linearly independent, $k' \in K(x_1)$ and $k'' \in K(x_j), j = 2, \ldots, k+1$, by (2.3). Thus, $\|x_i\|^o = 1$ $(i = 1, \ldots, k+1)$ by the definition of k' and k''. On the other hand, noticing that

$$\frac{1}{k'} + \frac{k}{k''} = \frac{1}{h}(k+1),$$

we find $\|x_1 + \ldots + x_{k+1}\|^o = \|(k+1)x\|^o = k+1$, which shows that l_M^o is not k-rotund.

Next, we assume that M is strictly convex on $[0, \pi_M(1/k)]$. Let $\|x_i\|^o = 1$ $(i = 1, \ldots, k+1)$ and $\|x_1 + \ldots + x_{k+1}\|^o = k+1$. We complete the proof by showing that $\{x_i\}_{i \le k+1}$ are linearly dependent. Choose $k_i = K(x_i)$ $(i = 1, \ldots, k+1)$ and write

$$h_j = \prod_{i \ne j} k_i, \quad h = (k+1) \prod_{i \le k+1} \frac{k_i}{\sum_{j \le k+1} h_j}, \quad x = \frac{1}{k+1}(x_1 + \ldots + x_{k+1}).$$

Then by the convexity of M,

$$\begin{aligned} k+1 &= \sum_{i \le k+1} \|x_i\|^o = \sum_{i \le k+1} \frac{1}{k_i}[1 + \varrho_M(k_i x_i)] \\ &= (k+1)\frac{1}{h}\left[1 + \sum_{m \le k+1} \frac{h_m}{\sum_{j \le k+1} h_j} \varrho_M(k_m x_m)\right] \\ &\ge (k+1)\frac{1}{h}[1 + \varrho_M(hx)] \ge (k+1)\|x\|^o = k+1. \end{aligned}$$

This implies $h \in K(x)$ and

$$M(hx(t)) = M\left(\sum_{m \le k+1} \frac{h_m}{\sum_{j \le k+1} h_j} k_m x_m(t)\right) = \sum_{m \le k+1} \frac{h_m}{\sum_{j \le k+1} h_j} M(k_m x_m(t))$$

for all $t \in \mathbb{N}$. Hence, for each $t \in \mathbb{N}$, $\{k_M x_m(t)\}_{m \le k+1}$ are in the same SAI of M. Since M is strictly convex on $[0, \pi_M(1/k)]$, if

$$t \in I = \{t \in \mathbb{N} : k_i x_i(t) \ne k_j x_j(t) \text{ for some } i, j \le k+1\},$$

then $|k_m x_m(t)| \ge \pi_M(1/k)$ $(m = 1, \ldots, k+1)$. Hence, I contains only finitely many elements $\{t_1, \ldots, t_n\}$ and

$$\pi_M(1/k) = (1 + \varepsilon_i)|hx(t_i)| < |hx(t_i)| \qquad (i \le n).$$

Let $\varepsilon = \min_{i \le n} \varepsilon_i > 0$. Then $(1 - \varepsilon)|hx(t_i)| \ge \pi_M(1/k)$, i.e.,

$$N(p((1 + \varepsilon)|hx(t_i)|)) \ge 1/k \qquad (i \le n).$$

Since $h \in K(x)$ implies

$$1 \geq \varrho_N(p((1-\varepsilon)|hx|)) \geq \sum_{i=1}^{n} N(p((1-\varepsilon)|hx(t_i)|)) \geq n/k,$$

we find $n \leq k$.

We finish the proof by considering the two cases $n = k$ and $n < k$.

If $n = k$, then the above inequalities show that $x(t) = 0$, and so $x_m(t) = 0$ ($m = 1, \ldots, k+1$) for all $t \notin I$. Observing that the system

$$\sum_{i \leq k+1} l_i k_i x_i(t_j) = 0 \qquad (j = 1, \ldots, k)$$

always has a nontrivial solution $(l_1, \ldots, l_{k+1})$, we find $\sum_{i \leq k+1} l_i k_i x_i = 0$, i.e., $\{x_i\}_{i \leq k+1}$ are linearly dependent.

If $n < k$, then the system

$$\sum_{i \leq k+1} l_i k_i x_i(t_j) = 0 \quad (j = 1, \ldots, n), \qquad \sum_{i \leq k+1} l_i = 0,$$

also has a nontrivial solution $(l_1, \ldots, l_{k+1})$. Recalling that $k_1 x_1(t) = \ldots = k_{k+1} x_{k+1}(t)$ for all $t \notin I$, we also obtain $\sum_{i \leq k+1} l_i k_i x_i = 0$. ∎

Remark. Observing that S_M contains infinitely many elements near the origin and infinity, it is easy to show $\operatorname{Ext} B(X) \neq \emptyset$ for each $X = L_M, L_M^o, l_M$ and l_M^o.

2.2. λ property. Let X be a Banach space. With each $x \in B(X)$, we associate the number

$$\lambda(x) = \sup\{\lambda \in [0,1] : x = \lambda e + (1-\lambda)y,\ y \in B(X),\ e \in \operatorname{Ext} B(X)\}.$$

If $\lambda(x) > 0$, then we call x a λ *point* of $B(X)$. If $\lambda(x) > 0$ for all $x \in B(X)$, then X is said to have the λ *property*. Moreover, if

$$\lambda(X) = \inf\{\lambda(x) : x \in B(X)\} > 0$$

then X is said to have the *uniform λ property*.

It is well known that if X has the λ property, then $B(X) = \overline{\operatorname{co}} \operatorname{Ext} B(X))$ and each element $x \in B(X)$ can be expressed as $x = \sum \lambda_i e_i$, where $e_i \in \operatorname{Ext} B(X)$ and $\lambda_i \geq 0, \sum \lambda_i = 1$. Moreover, if X has the uniform λ property, then the series $x = \sum \lambda_i e_i$ converges uniformly for all $x \in B(X)$.

Proposition 2.12. *Let* $\operatorname{Ext} B(X) \neq \emptyset$. *If* $x, y, z \in B(X)$ *and* $x = \alpha y + (1-\alpha)z$ *for some* $\alpha \in (0,1)$, *then* $\lambda(x) \geq \alpha\lambda(y)$. *Consequently*, $\lambda(0) = 1/2$ *and*

$$\lambda(u) \geq \max\{2^{-1}(1 - \|u\|), \lambda(u/\|u\|)\|u\|\} \qquad (u(\neq 0) \in X).$$

Proof. For any given $\varepsilon > 0$, choose $e \in \operatorname{Ext} B(X)$ and $y \in B(X)$ such that $y = \lambda e + (1-\lambda)u$ and $\lambda(y) - \varepsilon < \lambda$. Then

$$x = \alpha y + (1-\alpha)z = \alpha\lambda e + (1-\alpha\lambda)\frac{\alpha(1-\lambda)u + (1-\alpha)z}{1-\alpha\lambda}.$$

Since

$$\left\|\frac{\alpha(1-\lambda)u + (1-\alpha)z}{1-\alpha\lambda}\right\| \leq \frac{\alpha(1-\lambda) + (1-\alpha)}{1-\alpha\lambda} = 1,$$

we deduce $\lambda(x) \geq \alpha\lambda(y)$ as $\varepsilon > 0$ is arbitrary.

Arbitrarily pick $e \in \operatorname{Ext} B(X)$. Then $0 = 2^{-1}e + (-2^{-1})e$, hence, $\lambda(0) \geq 2^{-1}\lambda(e) = 1/2$. On the other hand, if $0 = \lambda e + (1-\lambda)y$, where $e \in \operatorname{Ext} B(X)$ and $y \in B(X)$, then $1 \geq \|y\| = \lambda/(1-\lambda)$. Therefore, $\lambda \leq 1/2$, and hence, $\lambda(0) = 1/2$.

The last claim follows from

$$u = (1 - \|u\|)0 + \|u\|\frac{u}{\|u\|}. \ \blacksquare$$

THEOREM 2.13. *For any Orlicz function M, L_M has the λ property.*

Proof. We need to show $\lambda(x) > 0$ for each $x \in B(L_M)$. In view of Proposition 2.12, we may assume $\|x\| = 1$ and $x \notin \operatorname{Ext} B(L_M)$. For convenience, we may assume $x(t) \geq 0$ on G.

First we consider the case $\varrho_M(x) = 1$. This implies $\mu\{t \in G : x(t) \in \mathbb{R} \setminus S_M\} > 0$ by Theorem 2.1. Let $\{[a_i, b_i]\}_i$ be all the SAIs of M. For each $\lambda \in (0,1)$, define

$$y_\lambda(t) = \begin{cases} b_i, & b_i > x(t) > \lambda a_i + (1-\lambda)b_i \text{ for some } i \geq 1, \\ a_i, & a_i < x(t) \leq \lambda a_i + (1-\lambda)b_i \text{ for some } i \geq 1, \\ x(t), & \text{otherwise.} \end{cases}$$

Then the function $f(\lambda) = \varrho_M(y_\lambda)$ is nondecreasing and

$$\varrho_M(y_\lambda) \leq \left(1 + \frac{1}{1-\lambda}\right)\varrho_M(x) < \infty.$$

Hence,

$$\sigma = \sup\{\lambda : f(\lambda) \leq 1\} \in (0,1).$$

Therefore, if we define $G_i = \{t \in G : x(t) = \sigma a_i + (1-\sigma)b_i)\}$ $(i \geq 1)$ then there exist $E_i \in G_i$ $(i \geq 1)$ such that $\varrho_M(y) = 1$, where

$$y(t) = \begin{cases} b_i, & b_i > x(t) > \sigma a_i + (1-\sigma)b_i \text{ or } t \in E_i \text{ for some } i \geq 1, \\ a_i, & a_i < x(t) < \sigma a_i + (1-\sigma)b_i \text{ or } t \in G_i \setminus E_i \text{ for some } i \geq 1, \\ x(t), & \text{otherwise.} \end{cases}$$

Clearly, by Theorem 2.1, $y \in \operatorname{Ext} B(L_M)$. Set $z = \sigma^{-1}[x - (1-\sigma)y]$ when $\sigma \geq 1/2$. Then $x = (1-\sigma)y + \sigma z$ and $z(t) = y(t)$ when $y(t) = x(t)$. If $y(t) = b_i$, then $a_i > x(t) > \sigma a_i + (1-\sigma)b_i$. Therefore,

$$b_i > x(t) \geq z(t) = \sigma^{-1}[x(t) - (1-\sigma)y(t)] \geq \sigma^{-1}[\sigma a_i + (1-\sigma)b_i - (1-\sigma)b_i] = a_i.$$

If $y(t) = a_i$, then by $\sigma \geq 1/2$, we also have

$$a_i < z(t) \leq \sigma^{-1}[\sigma a_i + (1-\sigma)b_i - (1-\sigma)a_i] = a_i + (\sigma^{-1} - 1)(b_i - a_i) \leq b_i.$$

Observing that M is affine on each $[a_i, b_i]$, we deduce that

$$1 = \varrho_M(x) = \varrho_M((1-\sigma)y + \sigma z)) = (1-\sigma)\varrho_M(y) + \sigma\varrho_M(z) = 1 - \sigma + \sigma\varrho_M(z).$$

This shows that $\varrho_M(z) = 1$, and thus, $\lambda(x) \geq 1 - \sigma > 0$. Similarly, if $0 < \sigma < 1/2$, then by defining

$$z = \frac{1}{1-\sigma}(x - \sigma y),$$

we can deduce that $\lambda(x) \geq \sigma > 0$.

If $\varrho_M(x) < 1$, then for any $\alpha \in (0,1)$, since $\varrho_M(x/(1-\alpha)) = \infty$, we can select $E \in \Sigma$ such that

$$\int_{G\setminus E} M(x(t))\,dt + \int_E M\left(\frac{x(t)}{1-\alpha}\right) dt = 1.$$

Let $u = x|_{G\setminus E} + (1-\alpha)^{-1}x|_E$ and $v = x|_{G\setminus E}$. Then $x = (1-\alpha)u + \alpha v$, $\varrho_M(u) = 1$ and $\varrho_M(v) < 1$. Thus, $\lambda(u) > 0$ by the first part of the proof. Thus, Proposition 2.12 shows that $\lambda(x) \ge (1-\alpha)\lambda(u) > 0$. ∎

THEOREM 2.14. *L_M has the uniform λ property iff M is strictly convex.*

Proof. Suppose that M is strictly convex. Then for each $x \in S(L_M) \setminus \operatorname{Ext} B(L_M)$, we have $\varrho_M(x) < 1$ by Theorem 2.1. Take u as in the last part of the proof of Theorem 2.13. Then $\lambda(x) \ge (1-\alpha)\lambda(u) = 1-\alpha$. Hence $\lambda(x) = 1$ since $\alpha > 0$ is arbitrary.

If $u \in B(L_M) \setminus \{0\}$, then since

$$u = \|u\|\frac{u}{\|u\|} + (1-\|u\|)0,$$

we deduce from Proposition 2.12 that $\lambda(u) > \max\{\|u\|, 2^{-1}(1-\|u\|)\} \ge 1/3$. Thus, $\lambda(L_M) \ge 1/3$.

If M is not strictly convex, then it has a SAI $[a,b]$ with $a > 0$. For any $\alpha \in (0,1)$, set $c = \alpha a + (1-\alpha)b$, and find $s \in S_M$ and $E, F \in \Sigma$ such that $E \cap F = \emptyset$, $\mu E > 0$, $\mu F > 0$ and $M(c)\mu E + M(s)\mu F = 1$.

Consider the element $u = s\chi_E + c\chi_F$. For any $e \in \operatorname{Ext} B(L_M), v \in B(L_M)$ and $\lambda \in (0,1)$ such that $u = \lambda e + (1-\lambda)v$, we have

$$1 = \varrho_M(u) = \varrho_M(e) = \varrho_M(v)$$

by the convexity of M. Moreover, for μ-a.e. $t \in F$, $e(t) = a$ or b and $v(t) \in [a,b]$; for μ-a.e. $t \in G \setminus F, e(t) = v(t) = u(t)$. This implies that $\{t \in F : e(t) = a\}$ is not a null set and for almost all t in this set, we have

$$u(t) = \alpha a + (1-\alpha)b = \lambda a + (1-\lambda)v(t) \le \lambda a + (1-\lambda)b.$$

This implies $\lambda \le \alpha$, i.e., $\lambda(u) \le \alpha$. Hence $\lambda(L_M) = 0$ since $\alpha \in (0,1)$ is arbitrary. ∎

THEOREM 2.15. *Each Orlicz space L_M^o has the λ property.*

Proof. We shall prove $\lambda(x) > 0$ for all $x \in S(L_M^o) \setminus \operatorname{Ext} B(L_M^o)$. Without loss of generality, we may assume $x(t) \ge 0$ for all t in G. Let $\{[a_i, b_i]\}_i$ be the set of all SAIs of M.

First, we select a point $k \in K(x)$ in the following way: if $K(x) = \{k\}$, then we have no alternative; if $K(x)$ contains more than one point, then we choose $k \in K(x)$ such that neither

$$\{t \in G : a_i \le kx(t) \le (a_i + b_i)/2 \text{ for some } i \in \mathbb{N}\}$$

nor

$$\{t \in G : b_i \ge kx(t) \ge (a_i + b_i)/2 \text{ for some } i \in \mathbb{N}\}$$

is a null set. Clearly, such a k exists. Therefore, for each $i \ge 1$, we can divide the set $\{t \in G : a_i \le kx(t) \le b_i\}$ into two sets E_i and F_i such that neither $\bigcup_i E_i$ nor $\bigcup_i F_i$ is a

null set and that

$$t \in E_i \Rightarrow kx(t) \le (a_i + b_i)/2, \qquad t \in F_i \Rightarrow kx(t) \ge (a_i + b_i)/2.$$

Next, we define a function $y(t)$ on G by considering two cases. If $K(x) = \{k\}$, then let

$$y(t) = \begin{cases} a_i, & a_i < kx(t) < (a_i + b_i)/2 \text{ for some } i \ge 1, \\ b_i, & b_i > kx(t) \ge (a_i + b_i)/2 \text{ for some } i \ge 1, \\ kx(t), & \text{otherwise.} \end{cases}$$

If $K(x)$ contains more than one point, then we set

$$y(t) = \begin{cases} a_i, & t \in E_i,\ i \ge 1, \\ b_i, & t \in F_i,\ i \ge 1, \\ kx(t), & \text{otherwise.} \end{cases}$$

Obviously, $y(t) \in S_M$ for all $t \in G$. Now, we prove $y/\|y\|^o \in \operatorname{Ext} B(L_M^o)$. It suffices to verify $K(y/\|y\|^o) = \{\|y\|^o\}$, i.e., $K(y) = \{1\}$ according to Theorem 2.3. Indeed, taking into account the definition of E_i, F_i and the fact that p is a constant on each $[a_i, b_i)$, when $K(x) = k$, we have, for any $\varepsilon \in (0,1)$,

$$\begin{aligned} &\varrho_N(p((1+\varepsilon)|y|)) \ge \varrho_N(p((1+\varepsilon/2)|kx|)) > 1, \\ &\varrho_N(p((1-\varepsilon)|y|)) \le \varrho_N(p((1-\varepsilon/2)|kx|)) < 1. \end{aligned}$$

When $K(x)$ contains more than one point, we have

$$\begin{aligned} &\varrho_N(p((1+\varepsilon)|y|)) > \varrho_N(p((1+\varepsilon/2)|kx|)) \ge 1, \\ &\varrho_N(p((1-\varepsilon)|y|)) < \varrho_N(p((1-\varepsilon/2)|kx|)) \le 1. \end{aligned}$$

Hence, $K(y) = \{1\}$.

Finally, we set $z = 2kx - y$. Then $y(t) = kx(t)$ implies $z = kx(t)$; $y(t) = a_i$ implies $a_i \le kx(t) \le z(t) \le b_i$; and $y(t) = b_i$ implies $b_i \ge kx(t) \ge z(t) \ge a_i$. Moreover, by the same method, we can verify $1 \in K(z)$. Hence, by Theorem 1.30,

$$\begin{aligned} k = \|kx\|^o &= 1 + \varrho_M(kx) = 1 + \varrho_M\left(\frac{y+z}{2}\right) \\ &= \frac{1}{2}[1 + \varrho_M(y)] + \frac{1}{2}[1 + \varrho_M(z)] = \frac{1}{2}\|y\|^o + \frac{1}{2}\|z\|^o, \end{aligned}$$

and so,

$$x = \frac{1}{2k}y + \frac{1}{2k}z = \frac{\|y\|^o}{2k}\frac{y}{\|y\|^o} + \frac{\|z\|^o}{2k}\frac{z}{\|z\|^o} = \frac{\|y\|^o}{2k}\frac{y}{\|y\|^o} + \frac{2k - \|y\|^o}{2k}\frac{z}{\|z\|^o},$$

which implies $\lambda(x) \ge \|y\|^o/(2k) > 0$. ■

THEOREM 2.16. *L_M^o has the uniform λ property iff* $\sup\{b_i/a_i : b_i > 1\} < \infty$, *where $\{[a_i, b_i]\}_i$ is the set of all SAIs of M.*

Proof. $\Leftarrow$ For each $x \in S(L_M^o) \setminus \operatorname{Ext} B(L_M^o)$, define y as in Theorem 2.15. We already proved that $\lambda(x) \ge \|y\|^o/(2k)$. Let

$$\alpha = \frac{1}{2\|\chi_G\|^o}, \quad c_M = 1 + \sup\{b_i/a_i : b_i > \alpha\}, \quad E = \{t \in G : |x(t)| > \alpha\}.$$

Then $\|x|_E\|^o \geq \|x\|^o - \|x|_{G\setminus E}\|^o \geq 1 - 1/2 = 1/2$ and $|y(t)| \geq \frac{1}{c_M}|x(t)|$ on E. Hence,

$$\lambda(x) \geq \frac{1}{2k}\|y\|^o \geq \frac{1}{2k}\|y|_E\|^o \geq \frac{1}{2k}\frac{1}{c_M}\|x|_E\|^o \geq \frac{1}{4c_M}.$$

Combine this with Proposition 2.12 to find that $\lambda(L_M^o) \geq 1/(8c_M)$.

$\Rightarrow$ Suppose that M has SAIs $\{[a_n, b_n]\}_n$ such that $b_n > n^3 a_n > 0$ and $N(p(a_n))\mu G \geq 1$ $(n \in \mathbb{N})$. Pick disjoint $G_n, E_n, F_n \in \Sigma$ such that

$$N(p(a_1))\mu E_n = N(p(b_1))\mu F_n = 1/(2n), \quad N(p(a_n))\mu G_n = 1 - 1/n \quad (n \in \mathbb{N}).$$

Clearly, $\mu E_n \to 0$ and $\mu F_n \to 0$ as $n \to \infty$. Then we decompose G_n into $\{G_i^n\}_{i=1}^n$ such that $\mu G_i^n = \frac{1}{n}\mu G_n$ $(i \leq n)$. Define

$$x_n = a_1\chi_{E_n} + b_1\chi_{F_n} + \sum_{i=1}^n \left[\left(1 - \frac{1}{i\ln(n)}\right)a_n + 1 - \frac{1}{i\ln(n)}b_n\right]\chi_{G_i^n} \qquad (n > 1).$$

We complete the proof by showing $\lambda(x_n/\|x_n\|^o) \to 0$.

From the fact that each $[a_i, b_i]$ is a SAI of M, we immediately deduce that $K(x_n) = \{1\}$, i.e., $K(x_n/\|x_n\|^o) = \{\|x_n\|^o\}$ by (1.19). For any $\lambda_n \in (0,1), u_n \in B(L_M^o)$ and $e_n \in \operatorname{Ext} B(L_M^o)$ satisfying $x_n/\|x_n\|^o = \lambda_n e_n + (1-\lambda_n)u_n$, we have to show $\lambda_n \to 0$.

First, we take $k_n \in K(e_n)$ and $h_n \in K(u_n)$. Then by the convexity of M and Theorem 1.30,

$$\begin{aligned}
1 &= \lambda_n\|e_n\|^o + (1-\lambda_n)\|u_n\|^o = \frac{\lambda_n}{k_n}[1 + \varrho_M(k_n e_n)] + \frac{1-\lambda_n}{h_n}[1 + \varrho_M(h_n u_n)] \\
&= \frac{(1-\lambda_n)k_n + \lambda_n h_n}{\lambda_n h_n}\left[1 + \frac{\lambda_n h_n}{(1-\lambda_n)k_n + \lambda_n h_n}\varrho_M(k_n e_n)\right. \\
&\quad \left. + \frac{(1-\lambda_n)k_n}{(1-\lambda_n)k_n + \lambda_n h_n}\varrho_M(h_n u_n)\right] \\
&\geq \frac{(1-\lambda_n)k_n + \lambda_n h_n}{k_n h_n}\left[1 + \varrho_M\left(\frac{k_n h_n}{(1-\lambda_n)k_n + \lambda_n h_n}(\lambda_n e_n + (1-\lambda_n)u_n)\right)\right] \\
&\geq \left\|\frac{x_n}{\|x_n\|^o}\right\|^o = 1.
\end{aligned}$$

This implies

$$\|x_n\|^o = \frac{k_n h_n}{(1-\lambda_n)k_n + \lambda_n h_n}, \quad \text{i.e.,} \quad \frac{1}{\|x_n\|^o} = \frac{1-\lambda_n}{h_n} + \frac{\lambda_n}{k_n} \tag{2.4}$$

and

$$\begin{aligned}
k_n e_n(t), h_n u_n(t) &\in [a_n, b_n] \qquad \mu\text{-a.e. on } G_n, \\
k_n e_n(t) = h_n u_n(t) &= x(t) \qquad \mu\text{-a.e. on } E_n \cup F_n.
\end{aligned}$$

But by Theorem 2.3 and since $e_n \in \operatorname{Ext} B(L_M^o)$, we derive

$$k_n e_n(t) = a_n \text{ or } b_n \qquad \mu\text{-a.e. on } G_n.$$

Second, since

$$M(b_n) = \int_0^{b_n} p(t)\,dt > \int_{a_n}^{b_n} p(t)\,dt \geq (b_n - a_n)p(a_n),$$

$$N(p(a_n)) = a_n p(a_n) - M(a_n) < a_n p(a_n),$$

we find

$$M(b_n)\mu G_n \ge (b_n/a_n - 1)N(P(a_n))\mu G_n \ge (n^3 - 1)(1 - 1/n).$$

Let

$$H_n = \{t \in G_n : k_n e_n(t) = b_n\}, \qquad i(n) = \max\{i \le n : \mu(G_i^n \cap H_n) > 0\}.$$

Then for μ-a.e. $t \in H_n \cap G_{i(n)}^n$,

$$\begin{aligned}(2.5)\qquad \left(1 - \frac{1}{i(n)\ln(n)}\right)a_n + \frac{1}{i(n)\ln(n)}b_n \\ = x_n(t) = \frac{\lambda_n\|x_n\|^o}{k_n}k_n e_n(t) + \frac{(1-\lambda_n)\|x_n\|^o}{h_n}h_n u_n(t) \\ > \frac{\lambda_n\|x_n\|^o}{k_n}b_n.\end{aligned}$$

Combining with $\sum_{i=1}^n \frac{1}{i} > \ln(n)$ and $M(b_n) \ge M(n^3 a_n) > n^3 M(a_n)$, we have

$$\begin{aligned}\lim_n \frac{k_n}{\|x_n\|^o} &= \lim_n \frac{1 + \varrho_M(k_n e_n)}{1 + \varrho_M(x_n)} \\ &\le \lim_n \frac{1 + M(a_n)\mu G_n + \sum_{i \le i(n)} M(b_n)\mu(H_n \cap G_i^n)}{\sum_{i \le n} \frac{1}{i\ln(n)} M(b_n)\mu G_i^n} \\ &\le \lim_n \frac{1 + M(a_n)\mu G_n + n^{-1} i(n) M(b_n)\mu G_n}{n^{-1} M(bn)\mu G_n} \\ &\le \lim_n \left[\frac{n}{(n^3-1)(1-1/n)} + \frac{1}{n^2} + i(n)\right].\end{aligned}$$

Combining this inequality with (2.4) and (2.5), we obtain: (a) if $i(n) = 0$, then

$$\lim_n \lambda_n \le \lim k_n/\|x_n\|^o = 0,$$

and (b) if $i(n) \ne 0$, then

$$\begin{aligned}\lim_n \lambda_n &\le \lim_n \frac{k_n}{\|x_n\|^o}\left[\left(1 - \frac{1}{i(n)\ln(n)}\right)\frac{a_n}{b_n} + \frac{1}{i(n)\ln(n)}\right] \\ &< \lim_n \left[n\frac{a_n}{b_n} + \frac{1}{\ln(n)}\right] \le \lim_n \left[\frac{1}{n^2} + \frac{1}{\ln(n)}\right] = 0. \ \blacksquare\end{aligned}$$

Now we discuss the λ property of Orlicz sequence spaces.

THEOREM 2.17. *Each l_M has the λ property.*

Proof. We need to show $\lambda(x) > 0$ for each $x \in S(l_M) \setminus \operatorname{Ext} B(l_M)$. Referring to the proof of Theorem 2.13, we may assume $x(i) \ge 0$ for any $i \in \mathbb{N}$ and $\varrho_M(x) = 1$. Therefore, there exist at least two coordinates of x belonging to the interiors of some SAIs of M. For each $\lambda \in (0,1)$, define

$$y_\lambda(i) = \begin{cases} b_k, & b_k > x(i) > \lambda a_k + (1-\lambda)b_k \text{ for some } k \ge 1, \\ a_k, & a_k < x(i) \le \lambda a_k + (1-\lambda)b_k \text{ for some } k \ge 1, \\ x(i), & \text{otherwise,}\end{cases}$$

and let $\sigma = \sup\{\lambda : \varrho_M(y_\lambda) \le 1\}$. Then $\sigma \in (0,1)$ and $\varrho_M(y_\sigma) \le 1$. Set

$$N_k = \{i \in \mathbb{N} : x(i) = \lambda a_k + (1-\lambda) b_k\}.$$

Then there exists E_k in N_k $(k \ge 1)$ such that the element $u = (u(i))_i$ defined by

$$u(i) = \begin{cases} b_k, & b_k > x(i) > \sigma a_k + (1-\sigma) b_k \text{ or } i \in E_k \text{ for some } k \ge 1, \\ a_k, & a_k < x(i) < \sigma a_k + (1-\sigma) b_k \text{ or } i \in \mathbb{N}_k \setminus E_k \text{ for some } k \ge 1, \\ x(i), & \text{otherwise}, \end{cases}$$

has the property that $\varrho_M(u) \le 1$ and that for any $i \in \mathbb{N}_k \setminus E_k$, if we change the value of $u(i)$ to be b_k, then the modular of u will become greater than one (by the definition of σ, such $\{E_k\}_k$ do exist). If $\varrho_M(u) = 1$, then we define $y = u$. If $\varrho_M(u) < 1$, then there exists at least one nonempty set $E_{k'}$. In this case, we arbitrarily pick $i' \in E_{k'}$ and find $\alpha \in (a_{k'}, b_{k'})$ such that $\varrho_M(y) = 1$, where $y = (y(i))_i$ is defined by

$$y(i) = \begin{cases} \alpha, & i = i', \\ u(i), & i \ne i'. \end{cases}$$

The rest part to verify, that $\lambda(x) \ge \min(\sigma, 1-\sigma) > 0$, is analogous to the proof of Theorem 2.13, hence we omit it here. ■

THEOREM 2.18. *l_M has the uniform λ property iff M is strictly convex near the origin.*

Proof. $\Leftarrow$ Let M be strictly convex on $[0,d]$. Set $\beta = 1/M(d) + 2$. Referring to the proof of Theorem 2.13, we only need to show $\lambda(x) \ge 1/\beta$ for all $x = (x(i))_i \in S(l_M) \setminus \operatorname{Ext} B(l_M)$ with $\varrho_M(x) = 1$ and $x(i) \ge 0$ $(i \in \mathbb{N})$. For any $\lambda \in (0,1)$, we define y_λ and $\sigma \in (0,1)$ as in the proof of Theorem 2.17. First we assume $\sigma \ge 1/2$. If $\sigma \le 1 - 1/\beta$, then by the proof of Theorem 2.17, $\lambda(x) \ge 1 - \sigma \ge 1/\beta$. Now, we consider the case $\sigma \ge 1 - 1/\beta$. Let $I = \{i \in \mathbb{N} : x(i) \in \mathbb{R} \setminus S_M\}$. Without loss of generality, we may assume $I = \{1, \ldots, m\}$ (clearly, $m < \beta$) and $x(i) \in (a_i, b_i)$ $(i \le m)$, where $\{[a_i, b_i]\}_{i \le m}$ are SAIs of M. Set

$$J = \{i \le m : \lambda_i \le 1/\beta,\ x(i) = (1-\lambda_i) a_i + \lambda_i b_i\}.$$

Then $J \ne \emptyset$ since $\sigma > 1 - 1/\beta$. For convenience, we assume $J = \{1, \ldots, r\}$ and

$$\lambda_r [M(b_r) - M(a_r)] = \max_{i \le r} \{\lambda_i [M(b_i) - M(a_i)]\}.$$

For any $\delta \in [0,1]$, if we define $u_\delta = (u(i))_i$ by

$$u(i) = \begin{cases} (1-\delta) a_r + \delta b_r, & i = r, \\ a_i, & i < r, \\ b_i, & r < i \le m, \\ x(i), & i > m, \end{cases}$$

then since $r\lambda_r < 1$ and $\varrho_M(u_\delta) = \varrho_M(y_{1-1/\beta}) \le \varrho_M(y_\sigma) \le 1$ and

$$\begin{aligned} \varrho_M(u_\sigma) - 1 &= \varrho_M(u_\sigma) - \varrho_M(x) \\ &= \sum_{i=1}^{r} M(a_i) + \delta [M(b_r) - M(a_r)] \\ &\quad - \Big\{ \sum_{i=1}^{r} [(1-\lambda_i) M(a_i) + \lambda_i M(b_i)] + \sum_{i=r+1}^{m} M(x(i)) \Big\} \end{aligned}$$

$$\geq \delta[M(b_r) - M(a_r)] - \sum_{i=1}^{r} \lambda_i [M(b_i) + M(a_i)]$$
$$\geq (\delta - r\lambda_r)[M(b_r) - M(a_r)],$$

we can find $\delta' \in [0, r\lambda_r]$ such that $\varrho_M(u_{\delta'}) = 1$. Let $y = u_{\delta'}$ and

$$z = \frac{1}{1 - 1/\beta}(x - y/\beta).$$

Then

$$z(r) = \frac{\beta x(r) - y(r)}{\beta - 1} = a_i + \frac{1}{\beta + 1}(\beta\lambda_r - \delta)(b_r - a_r) > a_r.$$

Showing that $\lambda(x) \geq 1/\beta$ is similar to the proof of Theorem 2.13. Symmetrically, if $\sigma < 1/2$, we also derive $\lambda(x) \geq 1/\beta$.

$\Rightarrow$ If M is not strictly convex near the origin, then for any $n \in \mathbb{N}$, M has a SAI $[a, b]$ such that $nM(b) \leq 1$. Define $x(i) = (1 - 1/n)a + b/n$ for $i \leq n$ and find $x(j) \in S_M$ $(j > n)$ such that $\sum_{i=1}^{\infty} M(x(i)) = 1$. Then $x = (x(i))_i \in S(l_M)$. Now, for any $\lambda \in (0, 1)$, $e \in \operatorname{Ext} B(l_M)$ and $u \in B(l_M)$ satisfying $x = \lambda e + (1 - \lambda)u$, we have $e(i) = x(i)$ for all $i > n$ and $e(i) = a$ or b for all $i \leq n$ but at most one exception $i' \leq n$ according to Theorem 2.6. Since $e(i') \in [a, b]$ and

$$\sum_{i \leq n} M(e(i)) = \sum_{i \leq n} M(x(i)) = (n - 1)M(a) + M(b),$$

we deduce that $e(j) = b$ for some $j \leq n$ and $e(i) = a$ for all $i \leq n$ other than j. Observing $z(j) \in [a, b]$, we find

$$(1 - 1/n)a + b/n = x(j) = \lambda e(j) + (1 - \lambda)u(j) \geq \lambda b + (1 - \lambda)a,$$

i.e., $\lambda \leq 1/n$. This shows $\lambda(x) \leq 1/n$, and so $\lambda(l_M) = 0$ since $n \in \mathbb{N}$ is arbitrary. ■

Slightly varying the proofs of Theorems 2.15 and 2.16, we obtain

THEOREM 2.19. (i) *Each l_M^o has the λ property.*

(ii) *l_M^o has the uniform λ property iff* $\sup\{b_i/a_i : 0 < b_i \leq 1\} < \infty$, *where* $\{[a_i, b_i]\}_i$ *is the set of SAIs of M.*

The following theorem shows that L_M^* may fail to have the λ property even if L_M has the uniform λ property.

THEOREM 2.20. *L_M^* does not have the λ property if $M \notin \Delta_2$.*

Proof. By the assumption, there exist $u_k > 0$ and disjoint sets $T_k \in \Sigma$ such that

$$M((1 + 1/n)u_k) > 2^k M(u_k), \quad M(u_k)\mu T_k = 2^{-k} \quad (k \in \mathbb{N}).$$

Define $u = \sum_{k \geq 1} u_k \chi_{T_k}$. For each $n \in \mathbb{N}$, we divide T_n into two disjoint sets $T_{n,1}$, $T_{n,2}$ such that $\mu T_{n,j} = 2^{-1}\mu T_n$ $(j = 1, 2)$ and let $G_{1,j} = \bigcup_{n \geq 1} T_{n,j}$ $(j = 1, 2)$. Then we divide $T_{n,1}$ and $T_{n,2}$ into $T_{n,3}$, $T_{n,4}$ and $T_{n,5}$, $T_{n,6}$ respectively such that $\mu T_{n,j} = 4^{-1}\mu T_n$ $(j = 3, 4, 5, 6)$ and let $G_{2,j} = \bigcup_{n \geq 1} T_{n,j+2}$ $(j = 1, 2, 3, 4)$. And so on, by induction, for each $k \in \mathbb{N}$, we obtain disjoint sets $\{G_{k,j} : j \leq 2^k\}$ such that $\|u|_{G_{k,j}}\| = 1$ $(j \leq 2^k)$. Let $B = \operatorname{span}\{E_M, u|_{G_{k,j}} : j \leq 2^k,\ k \in \mathbb{N}\}$ and define $f \in B^*$ by $f(E_M) = \{0\}$ and $f(u|_{G_{k,j}}) = 2^{-k}$ $(j \leq k,\ k \in \mathbb{N})$. Then it is easy to verify $\|f\| = 1$. Now, we extend f onto

L_M without changing its norm. Then by Theorem 1.65, $f \notin \operatorname{Ext} B(L_M^*)$. We claim that neither is f a λ point. Indeed, if there exist $\lambda \in (0,1), e \in \operatorname{Ext} B(L_M^*)$ and $\varphi \in B(L_M^*)$ such that $f = \lambda e + (1-\lambda)\varphi$, then by Theorem 1.65, for any fixed $n \in \mathbb{N}$ with $2^n > 1/\lambda$, there exists $j' \le 2^n$ such that $\varrho(u|_{G_{n,j'}}) = 1$ and $\varrho(u|_{G_{n,j}}) = 0$ for $j' \ne j \le 2^n$. Hence, if we set

$$x = \sum_{j \ne j',\, j \le 2^n} u|_{G_{n,j}} - u|_{G_{n,j'}},$$

then $\|x\| = 1$, and so

$$1 = \|\varphi\| \ge \varphi(x) = \frac{1}{1-\lambda}[f(x) - \lambda e(x)] = \frac{1}{1-\lambda}[1 - 2^{1-n} + \lambda] > 1,$$

a contradiction. ■

Let C be a convex subset of a Banach space X. A point $z \in C$ is called a *stable point* of C if the set-valued mapping $u \to \{(x,y) \in C \times C : x + y = 2u\}$ from C to $C \times C$ is lower semicontinuous at z with respect to the inherited topology. The set C is called *stable* if it consists of stable points. If the unit ball $B(X)$ is stable, then X is called a *stable space*. It is known that the set of extreme points of a stable set is closed. The stability is introduced as a tool to study extremal operators.

A. S. Granero [81], M. Wisła [278] and H. Sun & S. Chen [210] investigated the stability of Orlicz spaces; we only mention some of their results here.

THEOREM 2.21. (i) *$x \in S(L_M)$ or $S(l_M)$ is a stable point of $B(L_M)$ or $B(l_M)$ iff $\varrho_M(x) = 1$.*

(ii) *$x \in S(L_M^o)$ is a stable point of $B(L_M^o)$ iff $K(x)$ is a singleton.*

2.3. Locally uniform rotundity. Let X be a Banach space. Then $x \in S(X)$ is called a *uniformly rotund point* (URP) of $B(X)$ if $x_n \in B(X)$ and $\|x_n + x\| \to 2$ imply $x_n \to x$ as $n \to \infty$. If $x_n \in B(X)$ and $\|x_n + x\| \to 2$ imply $x_n \to x$ weakly as $n \to \infty$, then x is called a *weakly uniformly rotund point* (WURP) of $B(X)$. X is called a *locally uniformly rotund* (LUR) space provided that every point of $S(X)$ is a URP of $B(X)$. If all points in $S(X)$ are WURPs of $B(X)$, then X is called a *weakly locally uniformly rotund* (WLUR) space.

THEOREM 2.22. *If $M \notin \Delta_2$, then $B(L_M)$ has no WURP; if $M \in \Delta_2$ and $x \in S(L_M)$, then the following are equivalent*:

(i) *x is a URP of $B(L_M)$.*
(ii) *x is a WURP of $B(L_M)$.*
(iii) (a) *$x(t) \in S_M$ μ-a.e. and*
(b) *if $\mu\{t \in G : |x(t)| = b\} > 0$ for some SAI $[a,b]$ of M, then $M \in \nabla_2$, and $\mu\{t \in G : x(t)| = c\} = 0$ for each SAI $[c,d]$ of M.*

THEOREM 2.23. *If $M \notin \Delta_2 \cap \nabla_2$, i.e., $M \notin \Delta_2$ or $M \notin \nabla_2$, then $B(L_M^o)$ has no WURP; if $M \in \Delta_2 \cap \nabla_2, x \in S(L_M^o)$, then the following are equivalent*:

(i) *x is a URP of $B(L_M^o)$.*
(ii) *x is a WURP of $B(L_M^o)$.*

(iii) (a) *If p is a constant on an interval I and $k \in K(x)$, then $\mu\{t \in G : kx(t) \in I\} = 0$, and*
(b) $\varrho_N(p(k|x|)) = 1$ *or* $\mu\{t \in G : k|x(t)| = b\} = 0$ *for any SAI* $[a,b]$ *of* M.

THEOREM 2.24. *If $M \notin \Delta_2$, then $B(l_M)$ has no WURP; if $M \in \Delta_2$ and $x = (x(i)) \in S(l_M)$, then the following are equivalent*:

(i) *x is a URP of $B(l_M)$.*
(ii) *x is a WURP of $B(l_M)$.*
(iii) *If $|x(j)| \in (a,b]$ for some SAI $[a,b]$ of M, then $M \in \nabla_2$ and $|x(i)| \notin [c,d)$ for all $i \neq j$ and all SAI $[c,d]$ of M.*

THEOREM 2.25. *If $M \notin \Delta_2 \cap \nabla_2$, then $B(l_M^o)$ has no WURP; if $M \in \Delta_2 \cap \nabla_2$, and $x = (x(i)) \in S(l_M^o)$, then the following are equivalent*:

(i) *x is a URP of $B(l_M^o)$.*
(ii) *x is a WURP of $B(l_M^o)$.*
(iii) *$\{i \in \mathbb{N} : x(i) \neq 0\}$ is a singleton or*
(a) *for any $k \in K(x)$ and any $i \in \mathbb{N}, kx(i) \in S_M$ and for every SAI $[a,b]$ of M,*
(b) $k|x(j)| = b \Rightarrow \sum_{i \neq j} N(p(k|x(i)|)) + N(p_-(k|x(j)|)) < 1$ *and*
(c) $k|x(j)| = a \Rightarrow \sum_{i \neq j} N(p_-(k|x(i)|)) + N(p(k|x(j)|)) > 1$.

We only prove Theorems 2.22 and 2.25; the other two can be analogously verified. We begin with introducing two lemmas.

LEMMA 2.26. *Assume that M is strictly convex.*

(i) *Suppose $x_n, y_n \in B(L_M^o), \|x_n + y_n\|^o \to 2, k_n \in K(x_n)$ and $h_n \in K(y_n)$. Then $b = \sup_n\{k_n, h_n\} < \infty$ implies $k_n x_n - h_n y_n \to 0$ in measure.*
(ii) *$x_n, y_n \in B(L_M)$ and $\varrho_M((x_n + y_n)/2) \to 1$ imply $x_n - y_n \to 0$ in measure.*
(iii) *$x_n, y_n \in B(l_M), \|x_n + y_n\|^o \to 2$ and $\sup_n\{k_n, h_n\} < \infty$ (where $k_n \in K(x_n)$ and $h_n \in K(y_n)$) imply $k_n x_n(i) - h_n y_n(i) \to 0$ for any $i \in \mathbb{N}$.*
(iv) *$x_n, y_n \in B(l_M)$ and $\varrho_M((x_n + y_n)/2) \to 1$ imply $x_n(i) - y_n(i) \to 0$ for all $i \in \mathbb{N}$.*

Proof. We only verify (i), the others can be proved similarly. By Theorem 1.30, we immediately have

$$
\begin{aligned}
(2.6)\qquad 2 - \|x_n + y_n\|^o &\geq \frac{1}{k_n}[1 + \varrho_M(k_n x_n)] + \frac{1}{h_n}[1 + \varrho_M(h_n y_n)] \\
&\quad - \frac{k_n + h_n}{k_n h_n}\left[1 + \varrho_M\left(\frac{k_n h_n}{k_n + h_n}(x_n + y_n)\right)\right] \\
&= \frac{k_n + h_n}{k_n h_n} \int_G \left[\frac{h_n}{k_n + h_n} M(k_n x_n(t)) + \frac{k_n}{k_n + h_n} M(h_n y_n(t))\right. \\
&\quad \left. - M\left(\frac{k_n h_n}{k_n + h_n}(x_n(t) + y_n(t))\right)\right] dt \\
&= \int_G f_n(t)\, dt.
\end{aligned}
$$

If $\{k_n h_n - h_n y_n\}_n$ does not converge to zero in measure, then without loss of generality, we may assume that $\mu E_n > \varepsilon$, $n \in \mathbb{N}$, where

$$E_n = \{t \in G : |k_n x_n(t) - h_n y_n(t)| \geq \sigma\}$$

and σ, ε are fixed positive numbers.

Pick $k > 1$ such that $\mu F = \varepsilon/4$ implies $\|\chi_F\|^o = 1/k$, and define

$$A_n = \{t \in G : |x_n(t)| > k\}, \qquad B_n = \{t \in G : |y_n(t)| > k\}.$$

Then from $1 \geq \|x_n\|^o \geq \|x_n|_{A_n}\|^o \geq k\|\chi_{A_n}\|^o$, we have $\mu A_n < \varepsilon/4$. Similarly, we also have $\mu B_n < \varepsilon/4$.

By Proposition 1.4 (3), there exists $\delta > 0$ such that (1.4) holds for all $\alpha \in [1/(1+b), b/(1+b)]$ and all $u, v \in \mathbb{R}$ with $|u| \leq bk$ and $|v| \leq bk$ and $|u - v| \geq \sigma$. Since

$$\frac{k_n}{k_n + h_n}, \frac{h_n}{k_n + h_n} \in \left[\frac{1}{1+b}, \frac{b}{1+b}\right],$$

for all $t \in E_n \setminus (A_n \cup B_n)$ we have

$$M\left(\frac{k_n h_n}{k_n + h_n}(x_n(t) + y_n(t))\right) \leq (1-\delta)\left[\frac{h_n}{k_n + h_n} M(k_n x_n(t)) + \frac{k_n}{k_n + h_n} M(h_n y_n(t))\right].$$

Therefore, by the convexity of M,

$$\begin{aligned} f_n(t) &\geq \delta\left[\frac{1}{k_n} M(k_n x_n(t)) + \frac{1}{h_n} M(h_n y_n(t))\right] \\ &\geq 2\frac{\delta}{b}\frac{M(k_n x_n(t)) + M(-h_n y_n(t))}{2} \\ &\geq 2\frac{\delta}{b} M\left(\frac{k_n x_n(t) - h_n y_n(t)}{2}\right) \geq 2\delta M(\sigma/2)/b. \end{aligned}$$

It follows from (2.6) that

$$2 - \|x_n + y_n\|^o \geq \int\limits_{E_n \setminus (A_n \cup B_n)} f_n(t)\, dt \geq \varepsilon\delta M(\sigma/2)/b > 0.$$

This contradicts $\|x_n + y_n\|^o \to 2$. ■

LEMMA 2.27. *Let $(X, \|\cdot\|) = L_M, L_M^o, l_M$ or l_M^o. Assume $M \in \Delta_2 \cap \nabla_2$, $x_n, y_n \in B(X)$ and $\|x_n + y_n\| \to 2$. Then for any $\varepsilon > 0$, there exist $n' \in \mathbb{N}$ and $\delta > 0$ such that for all $n > n'$ and $E \in \Sigma$,*

$$\|y_n|_E\| < \delta \Rightarrow \|x_n|_E\| < \varepsilon.$$

Proof. We only consider the case $(X, \|\cdot\|) = L_M$; the other three cases are analogously proved.

Choose $u' > 0$ such that $\|u'\chi_G\| < \varepsilon/2$. Then we may assume $|x_n(t)| \geq u'$ on G. Since $M \in \nabla_2$, there exists $\beta > 0$ such that $u \geq u'$ implies

$$M\left(\frac{u}{2}\right) \leq \frac{1-\beta}{2} M(u).$$

Moreover, for any $\alpha > 0$, by Lemma 1.40, there exists $\delta > 0$ such that $\varrho_M(x) \leq 1$ and $\varrho_M(y) < \delta$ imply

$$|\varrho_M(x+y) - \varrho_M(y)| < \alpha.$$

Therefore, $\|y_n|_E\| < \delta$ implies

$$\int_E M\left(\frac{x_n(t)+y_n(t)}{2}\right)dt \le \int_E M\left(\frac{x_n(t)}{2}\right)dt + \alpha \le \frac{1}{2}(1-\beta)\int_E M(x_n(t))\,dt + \alpha.$$

Pick n' such that $\varrho_M((x_n+y_n)/2) > 1-\alpha$ when $n > n'$. Then by the convexity of M, for all $n > n'$,

$$\begin{aligned}\alpha &> 1 - \varrho_M\left(\frac{x_n+y_n}{2}\right)\\ &\ge \int_G \left[\frac{M(x_n(t))+M(y_n(t))}{2} - M\left(\frac{x_n(t)+y_n(t)}{2}\right)\right]dt\\ &\ge \frac{\beta}{2}\int_E M(x_n(t))\,dt - \alpha.\end{aligned} \tag{2.7}$$

Since $\alpha > 0$ is arbitrary, by Theorem 1.23, we arrive at the conclusion. ∎

Proof of Theorem 2.22. Take $d > 0$ such that $E = \{t \in G : |x(t)| \le d\}$ is not a null set. If $M \notin \Delta_2$, then there exists $u \in L_M$ such that $\varrho_M(u) < 1$ and $\theta(u|_E) = 1$. Hence, there exists a singular functional φ such that $\varphi(u|_E) = \|\varphi\| = 1$. Set $E_n = \{t \in E : |u(t)| > n\}$ and $x_n = x|_{G\setminus E_n} + u|_{E_n}$. Then

$$\|x_n + x\| \ge \|2x|_{G\setminus E_n}\| \to 2$$

and

$$\varrho_M(x_n) = \varrho_M(x|_{G\setminus E_n}) + \varrho_M(u|_{E_n}) \to \varrho_M(x) \le 1.$$

Therefore, $\limsup_n \|x_n\| \le 1$. But $\varphi(x_n - x) = \varphi(u|_{E_n}) - \varphi(x|_{E_n}) = \varphi(u) = 1$, contradicting the assumption that $x_n \to x$ weakly.

Now, we prove the second part of the theorem.

(i)⇒(ii) is trivial.

(ii)⇒(iii). (a) follows from the fact that a URP is an extreme point of $B(L_M)$.

If (b) is not true, then we have the following two cases.

(I) $M \notin \nabla_2$ and $D = \{t \in G : |x(t)| = b\}$ is not a null set for some SAI $[a,b]$ of M, or

(II) M has two SAIs $[a,b]$ and $[c,d]$ such that both $A = \{t \in G : |x(t)| = a\}$ and $B = \{t \in G : |x(t)| = d\}$ have positive measure.

In case (II), we can find nonnull sets $E \subset A$ and $F \subset B$ satisfying

$$[M(b) - M(a)]\mu E = [M(d) - M(c)]\mu F.$$

Define

$$y = x|_{G\setminus(E\cup F)} + b\chi_E \operatorname{sign} x + c\chi_F \operatorname{sign} x.$$

Then $y \ne x$, $\varrho_M(y) = \varrho_M(x) = 1$ and

$$\varrho_M\left(\frac{x+y}{2}\right) = \frac{\varrho_M(x)+\varrho_M(y)}{2} = 1,$$

a contradiction.

In case (I), we may assume $x(t) = b$ on D. Since $M \notin \nabla_2$, there exist $u_n \uparrow \infty$ and $E_n \downarrow$ such that $M(u_n/2) > 2^{-1}(1 - 1/n)M(u_n)$ and

$$M(u_n - b)\mu E_n + M(a)\mu(D \setminus E_n) = M(b)\mu D.$$

Let $x_n = x|_{G\setminus D} + a\chi_{D\setminus E_n} + (u_n - b)\chi_{E_n}$. Then $\varrho_M(x_n) = \varrho_M(x) = 1$ and

$$\begin{aligned}\varrho_M\left(\frac{x + x_n}{2}\right) &= \varrho_M(x|_{G\setminus D}) + M\left(\frac{a+b}{2}\right)\mu(D \setminus E_n) + M\left(\frac{u_n}{2}\right)\mu E_n \\ &\geq \varrho_M(x|_{G\setminus D}) + \frac{M(a) + M(b)}{2}\mu(D \setminus E_n) + \frac{1}{2}\left(1 - \frac{1}{n}\right)M(u_n)\mu E_n \\ &\to \varrho_M(x) = 1.\end{aligned}$$

Hence, $\|x_n\| = 1$ and $\|x_n + x\| \to 2$. But $\langle \chi_{D\setminus E_1}, x - x_n\rangle = (b - a)\mu(D \setminus E_1) > 0$. This contradiction completes the proof of (ii)$\Rightarrow$(iii).

(iii)$\Rightarrow$(i). Let $x_n \in S(L_M)$ and $\|x_n + x\| \to 2$. Then $\varrho_M((x_n + x)/2) \to 1$ since $M \in \Delta_2$. Thanks to Theorem 1.41, to show $x_n \to x$, it is sufficient to verify that $x_n \to x$ in measure. Set

$$E = \{t \in G : |x(t)| \notin [a, b] \text{ for all SAI } [a, b] \text{ of } M\}.$$

Then by the same method as in the proof of Lemma 2.26, we deduce that $x_n \to x$ in measure on E. Hence,

$$\liminf_n \int_E M(x_n(t))\,dt \geq \int_E M(x(t))\,dt.$$

Since $\varrho_M(x_n) = \varrho_M(x) = 1$, the above inequality means

$$\limsup_n \int_{G\setminus E} M(x_n(t))\,dt \leq \int_{G\setminus E} M(x(t))\,dt. \tag{2.8}$$

Moreover, for any $\alpha > 0$, we define $G_\alpha = \{t \in G : |x(t)| = \alpha\}$. Then by the same method, when $\alpha \neq b$ for any SAI $[a, b]$ of M, we have

$$\mu\{t \in G_\alpha : |x_n(t)| \leq \alpha - \varepsilon\} \to 0 \qquad (n \to \infty) \tag{2.9}$$

for all $\varepsilon > 0$; and when $\alpha \neq c$ for any SAI $[c, d]$ of M, we have

$$\mu\{t \in G_\alpha : |x_n(t)| \leq \alpha + \varepsilon\} \to 0 \qquad (n \to \infty) \tag{2.10}$$

for all $\varepsilon > 0$.

Hence, if (1) $\mu\{t \in G_\alpha : |x(t)| = b\} = 0$ for all SAI $[a, b]$ of M, then (2.9) and (2.8) show that $x_n \to x$ in measure on $G \setminus E$, and hence, on G.

If (1) is not true, then we have $M \in \nabla_2$ and $\mu\{t \in G_\alpha : |x(t)| = a\} = 0$ for each SAI $[a, b]$ of M. In this case, by applying Theorem 1.27, Lemma 2.27 and the fact that $x_n \to x$ in measure on E, we obtain

$$\lim_n \int_E M(x_n(t))\,dt = \int_E M(x(t))\,dt,$$

which means

$$\lim_n \int_{G\setminus E} M(x_n(t))\,dt = \int_{G\setminus E} M(x(t))\,dt.$$

Thus, by (2.10) and Lemma 2.27, we find that $x_n \to x$ in measure on $G \setminus E$, and thus, on G. ■

Proof of Theorem 2.25. Let $\{e_n\}_n$ be the natural basis of l^1 and $\{P_n\}_n$ the projections $P_n x = \sum_{i \le n} x(i) e_i$ for $x = (x(i))_i \in l_M$. Assume $x \in S(l_M^o)$ and $M \notin \Delta_2$. If $x \notin h_M$. Then there exists a singular functional φ such that $\varphi(x) \neq 0$. Define $x_n = P_n x$. Then $\|x_n\|^o \to 1$ and $\|x_n + x\|^o \to 2$. But $\varphi(x - x_n) = \varphi(x) \neq 0$. Therefore, x is not a WURP of $B(l_M^o)$.

If $x \in h_M$, then we define $x_n = P_n x + k^{-1}(I - P_n)u$, where $k \in K(x)$ and $u \in S(l_M) \setminus h_M$. Clearly $\|x_n + x\|^o \ge \|2P_n x\|^o \to 2$ and

$$\begin{aligned}\|x_n\|^o &\le k^{-1}[1 + \varrho_M(kx_n)] = k^{-1}\Big[1 + \sum_{i \le n} M(kx(i)) + \sum_{i > n} M(u(i))\Big] \\ &\to k^{-1}\Big[1 + \sum_{i=1}^{\infty} M(kx(i))\Big] = \|x\|^o = 1.\end{aligned}$$

But if we choose a singular functional φ with $\varphi(u) \neq 0$, then $\varphi(x_n - x) = k^{-1}\varphi(u) \neq 0$. This also shows that x is not a WURP of $B(l_M^o)$.

Now, for each $n \in \mathbb{N}$, we select $f_n \in S(L_N)$ such that $\langle f_n, x\rangle > 1 - 1/n$. If $M \notin \nabla_2$, then there exist $v_n \to 0$ such that

$$N(v_n) < 1/n, \qquad N((1 - 1/n)^{-1} v_n) > 2nN(v_n).$$

Choose a natural number m_n such that

$$m_n N(v_n) \le 1/n, \qquad (m_n + 1)N(v_n) > 1/n$$

and pick $I_n \subset \mathbb{N}$ with m_n elements such that $\|x|_{I_n}\|^o < 1/n$. Let $w_n = v_n \sum_{i \in I_n} e_i$. Then $\varrho_N(w_n) = m_n N(v_n) \le 1/n$ and

$$\varrho_N((1 - 1/n)^{-1} w) \ge 2m_n n N(v_n) > n(m_n + 1)N(v_n) > 1.$$

This shows that $1 \ge \|w_n\|_N \ge 1 - 1/n$. Moreover, by Proposition 1.84, we can find $u_n > 0$ such that $x_n = \sum_{i \in I_n} u_n e_i$ satisfies $\|x_n\|^o = 1$ and $m_n u_n v_n = \langle x_n, w_n\rangle = \|w_n\| \ge 1 - 1/n$. Hence, if we define $g_n = (1 - 1/n)(w_n + f_n|_{\mathbb{N} \setminus I_n})$, then

$$\varrho_N(g_n) \le (1 - 1/n)[m_n N(v_n) + \varrho_N(f_n)] \le 1 - n^{-2} < 1,$$

and so,

$$\begin{aligned}\|x_n + x\|^o &\ge \langle g_n, x_n + x\rangle \\ &= (1 - 1/n)[\langle f_n, x|_{\mathbb{N} \setminus I_n}\rangle + \langle w_n, x_n\rangle + \langle w_n, x|_{I_n}\rangle \\ &\ge (1 - 1/n)[(1 - 2/n) + (1 - 1/n) - \|x|_{I_n}\|^o] \to 2.\end{aligned} \tag{2.11}$$

Replace g_n in (2.11) by $h_n = (1 - 1/n)(w_n - f_n|_{\mathbb{N} \setminus I_n})$. Then (2.11) implies $\|x_n - x\|^o \ge \langle h_n, x_n - x\rangle \to 2$. This proves that x is not a URP of $B(l_M^o)$. The fact that x is not a WURP of $B(l_M^o)$ follows from

$$\langle -f_3|_{\mathbb{N} \setminus I_3}, x_n - x\rangle = \langle f_3, x|_{\mathbb{N} \setminus I_3}\rangle \ge \langle f_3, x\rangle - \|x|_{I_3}\|^o > 1 - 1/3 - 1/3 \neq 0.$$

Next, we prove the second part of the theorem. We have to show (ii)⇒(iii)⇒(i).

(ii)⇒(iii). If (iii) is not true, then $\{i : x(i) \neq 0\}$ is not a singleton and (a), (b) or (c) fails. Suppose that (a) does not hold, i.e., there exist $j \in \mathbb{N}$ and $k \in K(x)$ such that $kx(j) \in I$, where I is an interval on which p is a constant. Define $y = (y(i))_i$ by $y(j) \in I$ but $y(j) \neq kx(j)$ and $y(i) = kx(i)$ for $i \neq j$. Then y and kx are linearly independent, and so $y/\|y\|^o \neq x$. Clearly, if v is a supporting functional of x, then by Theorem 1.80, v is also a supporting functional of y. Therefore, $\|y/\|y\|^o + x\|^o = 2$ and thus, x is not a WURP of $B(l_M^o)$.

If (b) is not true, then there exist $k \in K(x)$ and $j \in \mathbb{N}$ such that $k|x(j)| = b$ and

$$\sum_{i \neq j} N(p(k|x(i)|)) + N(p_-(k|x(j)|)) \geq 1, \tag{2.12}$$

where $[a, b]$ is a SAI of M. Since for any supporting functional $v \in l_N$ of x, Theorem 1.80 gives $\varrho_N(v) = 1$ and

$$p_-(k|x(i)|) \leq |v(i)| \leq p(k|x(i)|),$$

by (2.12), we can find a supporting functional w of x such that $|w(j)| = p(k|x(j)|)$. Hence, if we define $y = y(i))_i$ by $y(i) = a \operatorname{sign} x(j)$ and $y(i) = kx(i)$ for $i \neq j$, then $y/\|y\|^o \neq x$ and $\langle w, y\rangle = \|y\|^o$. This yields

$$\|y/\|y\|^o + x\|^o = \langle w, y/\|y\|^o + x\rangle = 2,$$

whence x cannot be a WURP of $B(l_M^o)$. Similarly, if (c) fails, then x is not a WURP of $B(l_M^o)$.

(iii)⇒(i). For given $x_n \in S(l_M^o)$ with $\|x_n + x\|^o \to 2$, we pick $k \in K(x)$ and $k_n \in K(x_n)$. If we have verified $k_n x_n(i) \to kx(i), i \in \mathbb{N}$, then by Lemma 2.27, $\varrho_M(k_n x_n) \to \varrho_M(kx)$, i.e., $k_n = 1 + \varrho_M(k_n x_n) \to 1 + \varrho_M(kx) = k$. Therefore, $\|k_n x_n - kx\|^o \to 0$, or equivalently $x_n \to x$, completing the proof.

Now, we show that $k_n x_n(i) \to kx(i)$, $i \in \mathbb{N}$. If $\{i : x(i) \neq 0\} = \{j\}$, then for each $i \neq j$, by Lemma 2.27, $k_n x_n(i) \to 0 = kx(i)$ and $\|x_n|_{N\setminus\{j\}}\|^o \to 0$ as $n \to \infty$. Since $\{k_n\}$ is bounded by Theorem 1.35, we obtain $x_n(j) \to x(j)$, and so $x_n \to x$ as $n \to \infty$.

Suppose that $\{i : x(i) \neq 0\}$ is not a singleton. For any fixed $i \in \mathbb{N}$, if $kx(i)$ does not belong to any SAI of M, then with the same method as in the proof of Lemma 2.26, we can show that $k_n x(i) \to kx(i)$. If $k|x(i)| = b$ for some SAI $[a, b]$ of M, then similarly we can show that $\limsup_n k_n|x_n(i)| \leq b$ and $x_n(i)x(i) \geq 0$ for all large n. Since for any SAI $[c, d]$ of M, by (a), we have $k|x(j)| \notin (c, d)$, the right continuity of p implies

$$\limsup_n p(k_n|x_n(j)|) \leq p(k|x(j)|)$$

for all $j \in \mathbb{N}$. Observe that (1.5) implies

$$N(p(k_n|x_n(j)|)) \leq k_n|x_n(j)|p(k_n|x_n(j)|) \leq M(2k_n x_n(j)).$$

By $M \in \Delta_2$, Theorem 1.35 and Lemma 2.27, if $I = \{n \in \mathbb{N} : k_n|x_n(i)| < b\}$ is an infinite set, then

$$\limsup_{n \in I} \varrho_N(p(k_n|x_n)) \leq \sum_{j \neq i} N(p(k|x(j)|)) + N(p_-(k|x(i)|)) < 1.$$

This is impossible, since by Theorem 1.80, any supporting functional v of x_n satisfies $1 = \varrho_N(v) \le \varrho_N(p(k_n|x_n|))$. Hence, for all large n, we have $k_n|x_n(i)| \ge b$, and so $\lim_n k_n x_n(i) = b = kx(i)$.

Summing up the above discussion, we obtain $k_n x_n(j) \to kx(j)$, $j \in \mathbb{N}$. ■

THEOREM 2.28. (i) *L_M^o is LUR or WLUR iff $M \in \Delta_2 \cap \nabla_2$ and M is strictly convex.*

(ii) *L_M is LUR iff it is rotund, i.e., $M \in \Delta_2$ and M is strictly convex.*

(iii) *l_M^o is LUR or WLUR iff $M \in \Delta_2 \cap \nabla_2$ and M is strictly convex on $[0, \pi_M(1)]$, where $\pi_M(t) = \inf\{\alpha : N(p(\alpha)) \ge t\}$.*

(iv) *l_M is LUR or WLUR iff it is rotund and* (a) *$M \in \nabla_2$ or* (b) *M is strictly convex on $[M^{-1}(1/2), M^{-1}(1)]$.*

Proof. (i)–(iii) are direct consequences of Theorems 2.22, 2.23, 2.25 and Theorems 2.2, 2.4, 2.9. Hence, we only need to prove (iv).

Suppose that l_M is WLUR. Then it is rotund. If both (a) and (b) are false, i.e., $M \notin \nabla_2$ and there exists a SAI $[a, b]$ of M with $M(a) < 1$, then we can find $u \in (a, b]$ with $M(u) < 1$, and $v > 0$ with $M(u) + M(v) = 1$. Hence, if we define $x = (u, v, 0, 0, \ldots)$, then $x \in S(l_M)$ and x is not a WURP of $B(l_M)$ by Theorem 2.24.

Next, we assume that l_M is rotund, i.e., $M \in \Delta_2$ and M is strictly convex on $[0, M^{-1}(1/2)]$. If (b) holds, then for every $x = (x(i))_i \in S(l_M)$, we have $|x(i)| \notin (a, b]$ for all $i \in \mathbb{N}$ and all SAI $[a, b]$ of M. Therefore, Theorem 2.24 shows that x is a URP of $B(l_M)$.

Suppose $M \in \nabla_2$, $x = (x(i)) \in S(l_M)$ and $|x(j)| \in (a, b]$ for some SAI $[a, b]$. Then $M(x(j)) > 1/2$ since M is strictly convex on $[0, M^{-1}(1/2)]$. Thus, for $i \ne j$, we find $M(x(i)) < 1/2$, and thus, $|x(i)| \notin [a, b]$ for any SAI $[a, b]$ of M. This also implies that x is a URP of $B(l_M)$ by Theorem 2.24. ■

Let Y be a dual Banach space. A point $x \in S(Y)$ is called a *w^*-uniformly rotund point* (W*URP) of $B(Y)$ provided that $x_n \in B(Y)$ and $\|x + x_n\| \to 2$ imply $x_n \to x$ $*$-weakly. If every point of $S(Y)$ is a *W^*URP* of $B(Y)$, then Y is called a *w^*-uniformly rotund* (W*UR) *space*.

T. Wang & Z. Shi [247], T. Wang, Z. Shi & Q. Wang [251], T. Wang & Q. Wang [255] and T. Wang, Y. Wu & Y. Zhang [259] obtained all the criteria of w^*-uniformly rotund points for L_M^o, L_M, l_M^o and l_M, from which they derived necessary and sufficient conditions for the four spaces to be w^*-uniformly rotund. For instance, they proved that:

(I) L_M^o is w^*-uniformly rotund iff M is uniformly convex.

(II) l_M^o is w^*-uniformly rotund iff M is uniformly convex on $[0, \pi_M(1)]$.

Without much difficulty, the reader may verify the above two results directly.

The locally uniform rotundity can be generalized to locally uniform k-rotundity (LUkR). A Banach space X is called LUkR ($k \ge 1$) provided that for any $x' \in S(X)$ and $\varepsilon > 0$, there exists $\delta > 0$ such that

$$\|x' + x_1 + \ldots + x_k\| \ge (k + 1) - \delta$$

implies $\Delta = \Delta(x', x_1, \ldots, x_k) < \varepsilon$, where

$$\Delta(x', x_1, \ldots, x_k) = \sup_{\substack{f_i \in B(X^*) \\ i \le k}} \begin{vmatrix} 1 & 1 & \ldots & 1 \\ f_1(x') & f_1(x_1) & \ldots & f_1(x_k) \\ f_2(x') & f_2(x_1) & \ldots & f_2(x_k) \\ \ldots & \ldots & \ldots & \ldots \\ f_k(x') & f_k(x_1) & \ldots & f_k(x_k) \end{vmatrix}$$

Clearly, when $k = 1$, the LUkR coincides with LUR.

Z. Shi & Y. Fan [209] and Y. Cui [52] investigated the LUkR of Orlicz spaces and obtained the following results.

THEOREM 2.29. (i) *L_M^o (or L_M) is LUkR ($k \ge 1$) iff it is LUR.*

(ii) *l_M^o is LUkR ($k \ge 1$) iff $M \in \Delta_2 \cap \nabla_2$ and M is strictly convex on $[0, \pi_M(1/k)]$.*

(iii) *l_M is LUkR ($k \ge 1$) iff* (a) *$M \in \Delta_2$ and M is strictly convex on $[0, M^{-1}(1/(k+1))]$ and* (b) *$M \in \nabla_2$ or M is strictly convex on $[M^{-1}(1/(k+1)), M^{-1}(1/k)]$.*

To end this section, we introduce a concept which is closely related to LUR.

A Banach space X is said to have the *WM property* if $x, x_n \in S(X)$ and $\|x + x_n\| \to 2$ imply that there exists a supporting functional f of x such that $f(x_n) \to 1$.

It is known that X is LUR iff (a) X is rotund, (b) X is LUkR and (c) X has the WM property.

S. Chen, Y. Lu & B. Wang [37] and S. Chen & Y. Duan [24, 25] showed that:

(i) l_M^o has the WM property iff (a) $M \in \Delta_2 \cap \nabla_2$ and (b) for any SAI $[a, b]$ of M, if $2N(p(a)) + N(p(b)) \le 1$, then p is continuous at both a and b.

(ii) l_M has the WM property iff (a) $M \in \Delta_2$ and (b) if M is not strictly convex on $[0, M^{-1}(1)]$ then $M \in \nabla_2$.

(iii) L_M^o has the WM property iff $M \in \Delta_2 \cap \nabla_2$ and p is continuous at a and b for every SAI $[a, b]$ of M.

(iv) l_M has the WM property iff (a) $M \in \Delta_2$ and (b) $M \in \nabla_2$ or M is strictly convex.

2.4. Mid-point locally uniform rotundity and uniform rotundity in every direction. Recall that a Banach space X is *mid-point locally uniformly rotund* (MLUR) if, for any $x \in S(X)$ and x_n, $y_n \in B(X)$, $x_n + y_n \to 2x$ implies $x_n - y_n \to 0$.

THEOREM 2.30. (i) *L_M^o is MLUR iff $M \in \Delta_2$ and M is strictly convex.*

(ii) *l_M^o is MLUR iff $M \in \Delta_2$ and M is strictly convex on $[0, \pi_M(1)]$.*

(iii) *L_M or l_M is MLUR iff it is rotund.*

We need the following lemmas to prove the theorem independently of Theorem 2.10.

LEMMA 2.31. *If $\{x_n\}$ is bounded in L_M^o, $k_n \in K(x_n)$ and $k_n \to \infty$, then $x_n \to 0$ in measure.*

Proof. For each $\sigma > 0$, set $G_n = \{t \in G : |x_n(t)| \ge \sigma\}$. Then

$$\|x_n\|^o = \frac{1}{k_n}[1 + \varrho_M(k_n x_n)] \ge \frac{1}{k_n} M(k_n \sigma) \mu G_n.$$

Applying the fact $M(u)/u \to \infty$ as $u \to \infty$, we derive $\mu G_n \to 0$. ∎

LEMMA 2.32. *If $x_n \to x \ne 0$ E_N-weakly, then*

(i) *there exist* $\alpha > 0$ *and* $\varepsilon > 0$ *such that* $\mu\{t \in G : |x_n(t)| \geq \alpha\} \geq \varepsilon$ *for all large* n, *and*

(ii) *if moreover*, $M \in \Delta_2$ *and* M *is strictly convex*, *then* $\|x_n\|^o \to \|x\|^o$ *implies* $x_n \to x$.

Proof. (i) Since $x \neq 0$, there exist $\beta > 0$ and $\delta > 0$ such that $\mu E > \delta$, where $E = \{t \in G : |x_n(t)| \geq \beta\}$. Let $m \in \mathbb{N}$ satisfy $\delta 2^m > 2$. If (i) does not hold, then we may assume

$$\mu\{t \in G : |x_n(t)| \geq \beta/2\} < 2^{-m-n} \qquad (n \in \mathbb{N})$$

(passing to a subsequence if necessary). Set $F = \bigcup_n \{t \in G : |x_n(t)| \geq \beta/2\}$. Then $\mu F < 2^{-m} < \delta/2$, and $t \in G \setminus F$ implies $|x_n(t)| \geq \beta/2$. Define $v(t) = \chi_{E\setminus F}(t) \operatorname{sign} x(t)$. Then $v \in E_N$ and

$$|\langle v, x - x_n\rangle| \geq |\langle v, x\rangle| - |\langle v, x_n\rangle| \geq \beta\mu(E \setminus F) - 2^{-1}\beta\mu(E \setminus F) > \beta\delta/4,$$

contradicting the assumption that $x_n \to x$ E_N-weakly.

(ii) Without loss of generality, we may assume $\|x_n\|^o = \|x\|^o = 1$. Observing that $x_n \to x$ E_N-weakly is nothing but $x_n \to x$ $*$-weakly, we deduce that $\|x_n + x\|^o \to 2\|x\|^o = 2$. Let $k_n \in K(x_n)$ and $k \in K(x)$. Since (i) and Lemma 2.31 imply that $\{k_n\}$ is bounded, Lemma 2.26 (iii) shows that $k_n x_n \to kx$ in measure.

In the following, we show that $k_n \to k$. This will yield

$$\varrho_M(k_n x_n) = 1 - k_n \to 1 - k = \varrho_M(kx)$$

and then, by Theorem 1.41, $x_n \to x$, completing the proof.

For any $\varepsilon > 0$, choose $v \in E_N$ such that $\varrho_N(v) \leq 1$ and $\langle v, x\rangle > 1 - \varepsilon$. Applying Theorem 1.27, we can find $\delta > 0$ such that $\mu E < \delta$ implies

$$\int_E |x(t)v(t)|\,dt \leq \|v_E\|_N < \varepsilon.$$

Since $k_n x_n \to kx$ in measure, there exist $E_n \in \Sigma$ $(n \in \mathbb{N})$ with $\mu E_n < \delta$ such that

$$|k_n x_n(t) - kx(t)| < \varepsilon/\|\chi_G\|^o \qquad (t \in G \setminus E_n)$$

for all large n. Hence, by the Hölder Inequality, when n is large enough,

$$\begin{aligned} 1 \geq \int_G |x_n(t)v(t)|\,dt &\geq \int_{G\setminus E_n} \frac{k}{k_n}|x(t)v(t)|\,dt - \varepsilon \\ &\geq (1 - 2\varepsilon)k/k_n - \varepsilon. \end{aligned}$$

This shows that $\limsup_n k/k_n \leq 1$.

On the other hand, since $x_n \to x$ E_N-weakly, again by the Hölder Inequality, for all large n,

$$1 - \varepsilon < \langle v, x\rangle < \int_{G\setminus E_n} \frac{k}{k_n} x(t)v(t)\,dt + \varepsilon + \|v\chi_{E_n}\|_N \leq k/k_n + 2\varepsilon.$$

Therefore, $\liminf_n k/k_n \geq 1$. ∎

Proof of Theorem 2.30. (iii) follows immediately from Theorems 2.2, 2.7, 2.28 and the general implications LUR $\Rightarrow$ MLUR $\Rightarrow$ R (rotundity). Moreover, since the proofs of (i) and (ii) are parallel, we only prove (i).

Sufficiency. For any $z, x_n, y_n \in S(L_M^o)$ satisfying $x_n + y_n \to 2z$, it suffices to show that $\{x_n\}$ and $\{y_n\}$ have subsequences $\{x_{n_k}\}$ and $\{y_{n_k}\}$, respectively, such that $x_{n_k} - y_{n_k} \to 0$.

Since the unit ball of a separable dual space is w^* sequentially compact, $\{x_n\}$ and $\{y_n\}$ have subsequences $\{x_{n_k}\}$ and $\{y_{n_k}\}$ E_N-weakly convergent to $x', y' \in B(L_M^o)$ respectively. This implies $x_{n_k} + y_{n_k} \to x' + y'$ E_N-weakly. But $x_n + b_n \to 2z$, and we find $x' + y' = 2z$, i.e., $x' = y' = z$ since L_M^o is rotund by Theorem 2.4. Hence, by Lemma 2.32, $x_{n_k} \to z$ and $y_{n_k} \to z$.

Necessity. By Theorem 2.4, M is strictly convex. If $M \notin \Delta_2$, then there exist $u_k \uparrow \infty$ and disjoint sets $G_k \in \Sigma$ such that

$$M((1+1/k)u_k) > 2^k M(u_k), \qquad M(u_k)\mu G_k = 2^{-k}.$$

Decompose each G_k into E_k and F_k such that $\mu E_k = \mu F_k = 2^{-1}\mu G_k$ and then define

$$\begin{aligned} z &= \sum_{k=1}^{\infty} u_k \chi_{E_k} + \frac{1}{2}\sum_{k=1}^{\infty} u_k \chi_{F_k}, \\ x_n &= \sum_{k=1}^{\infty} u_k \chi_{E_k} + \frac{1}{2}\sum_{k=1}^{n-1} u_k \chi_{F_k}, \\ y_n &= \sum_{k=1}^{\infty} u_k \chi_{E_k} + \frac{1}{2}\sum_{k=1}^{n-1} u_k \chi_{F_k} + \sum_{k=n}^{\infty} u_k \chi_{F_k}. \end{aligned}$$

Then $x_n + y_n = 2z, \|x_n\|^o \le \|z\|^o$ and $\|x_n - y_n\|^o \ge \|x_n - y_n\| = 1$. We complete the proof by showing that $\|y_n\|^o \to \|z\|^o$. Let $\alpha \in K(z)$, i.e.,

$$\|z^o\| = \frac{1}{\alpha} + \frac{1}{\alpha}\sum_{k=1}^{\infty} M(\alpha u_k)\mu E_k + \frac{1}{\alpha}\sum_{k=1}^{\infty} M\left(\frac{\alpha}{2}u_k\right)\mu F_k.$$

Then for any $\varepsilon > 0$,

$$\frac{1}{\alpha}\sum_{k=n}^{\infty} M(\alpha u_k)\mu E_k < \varepsilon$$

for all large n. Therefore,

$$\begin{aligned} \|z\|^o &\le \|y_n\|^o \le \alpha^{-1}[1 + \varrho_M(\alpha y_n)] \\ &= \frac{1}{\alpha} + \frac{1}{\alpha}\sum_{k=1}^{\infty} M(\alpha u_k)\mu E_k + \frac{1}{\alpha}\sum_{k=1}^{n-1} M\left(\frac{\alpha}{2}u_k\right)\mu F_k \\ &\quad + \frac{1}{\alpha}\sum_{k=n}^{\infty} M(\alpha u_k)\mu E_k < \|z\|^o + \varepsilon. \ \blacksquare \end{aligned}$$

A Banach space X is called *uniformly rotund in every direction* (URED) if $x_n, z \in X, \|x_n\| \to 1, \|x_n + z\| \to 1$ and $\|2x_n + z\| \to 2$ imply $z = 0$.

THEOREM 2.33. (i) *L_M or l_M is URED iff it is rotund.*

(ii) L_M^o *is URED iff* (a) M *is strictly convex and* (b) *for any* $u' > 0, \varepsilon > 0$ *and* $\varepsilon' > 0$, *there exist* $\gamma > 0$ *and* $D > 0$ *such that for any* $u \geq u'$,

$$p((1+\varepsilon)u) \leq (1+\gamma)p(u) \Rightarrow p(u) \leq Dp(\varepsilon' u).$$

(iii) l_M^o *is URED iff* (a) M *is strictly convex on* $[0, \pi_M(1)]$ *and* (b) *for any* $\varepsilon > 0$ *and* $\varepsilon' > 0$, *there exist* $\gamma > 0$ *and* $D > 0$ *such that for all small* u,

$$p((1+\varepsilon)u) \leq (1+\gamma)p(u) \Rightarrow p(u) \leq Dp(\varepsilon' u).$$

In the theorem, (i) results immediately from Theorems 2.2, 2.7 and Lemma 2.26. In the following, we only prove (ii) since (iii) can be deduced analogously.

We first prove two lemmas.

LEMMA 2.34. *Suppose that* $x_n, y_n \in B(L_M)$ *and* $v_n \in B(L_N)$ *satisfy* $\langle v_n, x_n + y_n\rangle \to 2$. *Then for any* $G_n \in \Sigma, k_n \in K(x_n)$ *and* $h_n \in K(y_n)$,

$$\lim_n \int_{G_n} [k_n x_n(t) - h_n y_n(t)] v_n(t)\, dt = \lim_n \int_{G_n} [M(k_n x_n(t)) - M(h_n y_n(t))]\, dt$$

provided that the limits exist and that $\{k_n, h_n\}_n$ *is bounded.*

Proof. By the assumption, $\langle v_n, x_n\rangle \to 1$, $\langle v_n, y_n\rangle \to 1$, and thus, by the Hölder Inequality,

$$1 \leftarrow \frac{1}{k_n}\langle v_n, k_n x_n\rangle \leq \frac{1}{k_n}[\varrho_N(v_n) + \varrho_M(k_n x_n)] \leq \frac{1}{k_n}[1 + \varrho_M(k_n x_n)] = \|x_n\|^o \to 1.$$

This implies

$$\int_G [M(k_n x_n(t)) + N(v_n(t)) - k_n x_n(t) v_n(t)]\, dt \to 0.$$

Since the integrand is nonnegative, we derive

$$\int_{G_n} [M(k_n x_n(t)) + N(v_n(t)) - k_n x_n(t) v_n(t)]\, dt \to 0.$$

Similarly, we also have

$$\int_{G_n} [M(h_n y_n(t)) + N(v_n(t)) - h_n y_n(t) v_n(t)]\, dt \to 0.$$

The conclusion follows from the last two formulas. ∎

LEMMA 2.35. *Given* $\sigma \in (0, 1/2)$, $\varepsilon > 0$, *and* $\gamma > 0$, *there exists* $\delta > 0$ *such that for any* $u > 0$ *and any* $\lambda \in [\sigma, 1/2]$ *satisfying*

$$\lambda M((1+\varepsilon)u) + (1-\lambda)M(u) \leq (1+\delta)[M(\lambda(1+\varepsilon)u + (1-\lambda)u)], \tag{2.13}$$

there exists $\tau \in [(1+\lambda\varepsilon)u, (1+\varepsilon)u]$ *such that*

$$p(\tau) \leq (1+\gamma)p\left(\frac{1+\sigma\varepsilon}{1+2\sigma\varepsilon}\tau\right). \tag{2.14}$$

Proof. Set

$$\alpha = 1 + 2\lambda\varepsilon, \qquad w = \lambda(1+\varepsilon)u + (1-\lambda)u = u + \lambda\varepsilon u.$$

Then $w = (u + \alpha u)/2$. Since

$$M(\alpha u) = M((1-2\lambda)u + 2\lambda(1+\varepsilon)u) \leq (1-2\lambda)M(u) + 2\lambda M((1+\varepsilon)u),$$

we deduce that

$$\begin{aligned} M(\alpha u) + M(u) &\le 2[\lambda M((1+\varepsilon)u) + (1-\lambda)M(u)] \\ &\le 2(1+\delta)M(\lambda(1+\varepsilon)u + (1-\lambda)u) = 2(1+\delta)M(w). \end{aligned}$$

Hence,

$$\begin{aligned} 2\delta M(w) &\ge [M(\alpha u) - M(w)] - [M(w) - M(u)] \\ &= \int_{(\alpha+1)u/2}^{\alpha u} p(s)\,ds - \int_{u}^{(\alpha+1)u/2} p(s)\,ds \\ &= \int_{(\alpha+1)u/2}^{\alpha u} \left[p(s) - p\left(s - \frac{\alpha-1}{2}u\right)\right] ds \\ &\ge \int_{(\alpha+1)u/2}^{\alpha u} \left[p(s) - p\left(s - \frac{\alpha-1}{2}\frac{s}{\alpha}\right)\right] ds. \end{aligned}$$

Since the integrand is nonnegative, there exists $\tau \in [2^{-1}(\alpha+1)u, \alpha u]$ such that

$$\begin{aligned} 2\delta M(w) &> \left(\alpha u - \frac{\alpha+1}{2}u\right)\left[p(\tau) - p\left(\tau - \frac{\alpha-1}{2\alpha}\tau\right)\right] \\ &= \frac{\alpha-1}{2}u\left[p(\tau) - p\left(\frac{1+\lambda\varepsilon}{1+2\lambda\varepsilon}\tau\right)\right]. \end{aligned}$$

Finally, as

$$M(w) \le wp(w) = \frac{\alpha+1}{2}up\left(\frac{\alpha+1}{2}u\right) \le \frac{\alpha+1}{2}up(\tau),$$

we arrive at

$$p\left(\frac{1+\sigma\varepsilon}{1+2\sigma\varepsilon}\tau\right) \ge p\left(\frac{1+\lambda\varepsilon}{1+2\lambda\varepsilon}\tau\right) \ge \left(1 - 2\delta\frac{\alpha+1}{\alpha-1}\right)p(\tau).$$

The proof is completed by taking some $\delta > 0$ sufficiently small. ∎

Proof of Theorem 2.33 (ii). *Sufficiency.* Assume that L_M^o is not URED, i.e., there exist $x_n, z \in L_M^o$ such that $\|x_n\|^o \to 1, \|x_n + z\|^o \to 1$ and $\|2x_n + z\|^o \to 2$ but $z \ne 0$. Since M is strictly convex, $K(x_n) = \{k_n\}$. Without loss of generality, we may assume that $\{x_n\}$ does not converge to zero in measure (otherwise, we consider $x_n + z/4$ and $z/2$ instead of x_n and z respectively). Hence, by Lemma 2.31, $\{k_n\}$ is bounded. By passing to a subsequence, we may assume $k_n \to k$ (≥ 1) and $1 \le k_n \le 2k$. Moreover, we may assume that $2k\|z\|^o \le 1$ and that $\{x_n + z\}$ does not converge to zero (otherwise, instead of z, we consider βz for some $\beta > 0$).

Let $y_n = x_n + z$ and $K(y_n) = \{h_n\}$. Then we can also assume that $h_n \to h$ (≥ 1). Since by Lemma 2.26, $k_n x_n - h_n y_n \to 0$ in measure, we find that $k \ne h$. Without loss of generality, we may assume $k > h$ and $k_n > h_n$ for all $n \in \mathbb{N}$ and $k_n x_n - h_n y_n \to 0$ μ-a.e. on G. Set $\lambda_n = h_n/(k_n + h_n)$. Then $\lambda_n \to h/(k+h)$ and thus, $\sigma \le \lambda_n \le 1/2$ for some $\sigma > 0$.

Pick $c > 0$ such that $\mu E = d > 0$, where $E = \{t \in G : |z(t)| \ge c\}$. For any $\varepsilon > 0$, by the assumption, there exist $D > 0$ and $\gamma \in (0,1)$ such that $\tau \ge \sigma\varepsilon$ satisfying (2.14)

implies

$$p\left(\frac{1+\sigma\varepsilon}{1+2\sigma\varepsilon}\tau\right) \le Dp\left(\frac{\varepsilon}{2k}\tau\right). \tag{2.15}$$

Select $\delta > 0$ such that $\delta \le \lambda \le 1/2$ and (2.13) imply the existence of $\tau \in [u+\lambda\varepsilon u, u+\varepsilon u]$ satisfying (2.14).

Since $\|2kz\|^o \le 1$, by Theorem 1.21, $\varrho_M(2kz) \le 1$ and

$$\langle |z|, p(|z|)\rangle = \varrho_M(z) + \varrho_N(p(|z|)) \le 2.$$

Therefore, there exists $\alpha \in (0, d/2)$ such that $\mu B \le \alpha$ implies

$$\langle |z|, p(|z|)|_B\rangle \le \frac{\varepsilon^2}{4kD}, \qquad \varrho_M(2kz|_B) < \varepsilon. \tag{2.16}$$

Recalling that $k_n x_n - h_n y_n \to 0$ μ-a.e. on G, we can find $F \in \Sigma$ such that $\mu(G \setminus F) < \alpha$ and $k_n x_n - h_n y_n \to 0$ uniformly on F and $|z| \le D'$ on F for some $D' > 0$. Noticing that $\mu(E \cap F) > d/2$, we deduce that

$$\varrho_M\left(\frac{h}{k-h}z|_F\right) \ge \varrho_M\left(\frac{h}{k-h}z|_{F\cap E}\right) \ge \frac{d}{2}M\left(\frac{hc}{k-h}\right). \tag{2.17}$$

For each $n \in \mathbb{N}$, set

$$\begin{aligned}
A_n &= \{t \in G \setminus F : x_n(t)y_n(t) < 0\},\\
I_n &= \{t \in G : \max\{|k_n x_n(t)|, |h_n y_n(t)|\} < \varepsilon\},\\
J_n &= \{t \in G : |k_n x_n(t) - h_n y_n(t)| \le \varepsilon \max\{|k_n x_n(t)|, |h_n y_n(t)|\}\},\\
H_n &= \Bigg\{t \in G : (1+\delta)M\left(\frac{k_n h_n}{k_n+h_n}(x_n(t)+y_n(t))\right)\\
&\qquad\qquad < \frac{h_n}{k_n+h_n}M(k_n x_n(t)) + \frac{k_n}{k_n+h_n}M(h_n y_n(t))\Bigg\},\\
Q_n &= \{t \in G \setminus (F \cup A_n) : |z(t)| < \varepsilon|x_n(t)| \text{ or } |x_n(t)| < |y_n(t)|\},\\
T_n &= G \setminus (F \cup A_n \cup I_n \cup J_n \cup H_n \cup Q_n).
\end{aligned}$$

Pick $v_n \in B(L_N)$ such that $v_n(t)[x_n(t)+y_n(t)] \ge 0$ and $\langle v_n, x_n+y_n\rangle \to 2$. Then $\langle v_n, x_n\rangle \to 1$ and $\langle v_n, y_n\rangle \to 1$, and thus,

$$k - h = \lim_n (k_n - h_n) = \lim_n \int_G v_n(t)[k_n x_n(t) - h_n y_n(t)]\,dt.$$

In the following, we estimate the above integral.

(a) Since $k_n x_n - h_n y_n \to 0$ uniformly on F, for all large n,

$$\int_F |[k_n x_n(t) - h_n y_n(t)]v_n(t)|\,dt < \varepsilon.$$

(b) Notice that $x_n(t)y_n(t) < 0$ implies $x_n(t)z(t) \le 0$ and $|x_n(t)| < |z(t)|$. For any $A \in \Sigma$ contained in A_n, by (2.16),

$$\int_A |M(k_n x_n(t)) - M(h_n y_n(t))|\,dt \le \int_A [M(k_n x_n(t)) + M(h_n y_n(t))]\,dt$$
$$\le 2\int_A M(2kz(t))\,dt < 2\varepsilon.$$

Hence, by Lemma 2.34, when n is large enough,

$$\int_{A_n} |(k_n x_n(t) - h_n y_n(t))v_n(t)|\,dt < 4\varepsilon.$$

(c) Clearly, by the Hölder Inequality,

$$\int_{I_n} |[k_n x_n(t) - h_n y_n(t)]v_n(t)|\,dt < 2\varepsilon\|\chi_G\|^o.$$

(d) We have

$$\int_{J_n} |[k_n x_n(t) - h_n y_n]v_n(t)|\,dt \le \varepsilon \int_{J_n} [|k_n x_n(t)| + |h_n y_n(t)|]|v_n(t)|\,dt \le \varepsilon(k_n + h_n).$$

(e) Using the method of the proof of Lemma 2.26, we can easily deduce that, for each $H \in \Sigma$ contained in H_n,

$$\frac{\delta}{1+\delta}\int_H \left[\frac{1}{k_n}M(k_n x_n(t)) + \frac{1}{h_n}M(h_n y_n(t))\right] dt \le 2 - \|x_n + y_n\|^o \to 0.$$

Therefore, for all n large enough,

$$\int_{H_n} |[k_n x_n(t) - h_n y_n(t)]v_n(t)|\,dt < \varepsilon.$$

(f) By (2.17),

$$\frac{1}{k_n}\varrho_M(k_n x_n|_F) \ge \varrho_M(x_n|_F) \to \varrho_M\left(\frac{h}{k-h}z|_F\right) \ge \frac{d}{2}M\left(\frac{hc}{k-h}\right).$$

Combining this with

$$1 \leftarrow \|x_n\|^o = \frac{1}{k_n}[1 + \varrho_M(k_n x_n|_{Q_n}) + \varrho_M(k_n x_n|_{G\setminus Q_n})] \ge \|x_n|_{Q_n}\|^o + \frac{1}{k_n}\varrho_M(k_n x_n|_F)$$
$$\ge \int_{Q_n} |x_n(t)v_n(t)|\,dt + \frac{d}{2}M\left(\frac{hc}{k-h}\right),$$

when n is large enough, we have

$$\int_{Q_n} |x_n(t)v_n(t)|\,dt < 1 - \frac{d}{3}M\left(\frac{hc}{k-h}\right).$$

Assume $x_n(t)v_n(t) \ge 0$. Then by $v_n(t)[x_n(t) + y_n(t)] \ge 0$, we have $x_n(t)v_n(t) \ge 0$ and $y_n(t)v_n(t) \ge 0$. Hence, if $|x_n(t)| < |y_n(t)|$, then $x_n(t)z(t) > 0$, and so

$$v_n(t)[k_n x_n(t) - h_n y_n(t)] = (k_n - h_n)x_n(t)v_n(t) - h_n z(t)v_n(t) < (k_n - h_n)x_n(t)v_n(t),$$

and if $|z(t)| < \varepsilon|x_n(t)|$, then

$$v_n(t)[k_n x_n(t) - h_n y_n(t)] \le (k_n - h_n)x_n(t)v_n(t) + \varepsilon h_n x_n(t)v_n(t).$$

Therefore, for all large n,

$$\int_{Q_n} [k_n x_n(t) - h_n y_n(t)] v_n(t)\,dt \le (k_n - h_n + \varepsilon h_n) \int_{Q_n} x_n(t) v_n(t)\,dt$$
$$\le (k_n - h_n + \varepsilon h_n)\left[1 - \frac{d}{3} M\left(\frac{hc}{k-h}\right)\right].$$

(g) For each $t \in T_n$, observing that $t \notin Q_n \cup J_n \cup A_n$ implies

$$\varepsilon h_n |y_n(t)| \le \varepsilon k_n |x_n(t)| \le k_n |x_n(t)| - h_n |y_n(t)|,$$

by Lemma 2.35 and $t \notin H_n$, there exists

$$\tau_n(t) \in [\lambda_n k_n |x_n(t)| + (1-\lambda_n) h_n |y_n(t)|, k_n |x_n(t)|]$$

such that

$$p(\tau_n(t)) \le (1+\gamma) p\left(\frac{1+\sigma\varepsilon}{1+2\sigma\varepsilon}\tau_n(t)\right).$$

Noticing that $t \notin I_n \cup Q_n$ implies $\tau_n(t) \ge \lambda_n k_n |x_n(t)| \ge \sigma\varepsilon$, by (2.15), we have

$$p(\tau_n(t)) \le (1+\gamma) p\left(\frac{1+\sigma\varepsilon}{1+2\sigma\varepsilon}\tau_n(t)\right) \le 2Dp\left(\frac{\varepsilon}{2k}\tau_n(t)\right).$$

It follows from $t \notin H_n \cup Q_n$ that

$$\begin{aligned}
\lambda_n M(k_n x_n(t)) + (1-\lambda_n) M(h_n y_n(t)) &\le (1+\delta) M(\lambda_n k_n x_n(t) + (1-\lambda_n) h_n y_n(t)) \\
&\le (1+\delta) M(\tau_n(t)) \le (1+\delta)\tau_n(t) p(\tau_n(t)) \\
&\le 2D(1+\delta)\tau_n(t) p\left(\frac{\varepsilon}{2k}\tau_n(t)\right) \\
&\le 2D(1+\delta) k_n |x_n(t)| p\left(\frac{\varepsilon}{2k} k_n |x_n(t)|\right) \\
&\le \frac{4}{\varepsilon} Dk(1+\delta)|z(t)| p(|z(t)|).
\end{aligned}$$

This and (2.16) imply that

$$\int_{T_n} [\lambda_n M(k_n x_n(t)) + (1-\lambda_n) M(h_n y_n(t))]\,dt \le \frac{4}{\varepsilon} Dk(1+\delta) \int_{G\setminus F} |z(t)| p(|z(t)|)\,dt \le (1+\delta)\varepsilon.$$

Thus, by Lemma 2.34, for all large n,

$$\int_{T_n} |v_n(t)[k_n x_n(t) - h_n y_n(t)]|\,dt \le 2 \int_{T_n} [M(k_n x_n(t)) + M(h_n y_n(t))]\,dt$$
$$\le 2(k_n + h_n)(1+\delta)\varepsilon.$$

Since $\varepsilon > 0$ is arbitrary, from (a) to (g), we derive a contradiction:

$$k - h \le (k-h)\left[1 - \frac{d}{3} M\left(\frac{hc}{k-h}\right)\right].$$

Necessity. Since URED $\Rightarrow$ rotundity, by Theorem 2.4, M is strictly convex, or equivalently, the right derivative q of its complementary function N is continuous. Keep in mind that in this case $q(p(t)) = t$ for all $t \ge 0$.

If (b) does not hold, then there exist $\varepsilon > 0$ and $u_k \uparrow \infty$ such that for every $k \in \mathbb{N}$,

$$p((1+\varepsilon)u_k) \le (1+1/k)p(u_k), \qquad p(u_k) \ge k2^k p(\varepsilon u_k). \tag{2.18}$$

Passing to a subsequence if necessary, we may assume

$$\lim_k N(p((1+\varepsilon)u_k))/[u_k p(u_k)] = r. \tag{2.19}$$

Observing that

$$N(p((1+\varepsilon)u_k)) \le (1+\varepsilon)u_k p((1+\varepsilon)u_k) \le (1+\varepsilon)(1+1/k)u_k p(u_k)$$

and

$$N(p(u_k)) \ge \int_{p(\varepsilon u_k)}^{p(u_k)} q(s)\,ds \ge \varepsilon u_k[p(u_k) - p(\varepsilon u_k)] \ge \varepsilon\left(1 - \frac{1}{k}\right)u_k p(u_k),$$

we deduce that $\varepsilon \le r \le 1+\varepsilon$. From

$$\begin{aligned} N(p((1+\varepsilon)u_k)) - N(p(u_k)) &\le (1+\varepsilon)u_k[p((1+\varepsilon)u_k) - p(u_k)] \\ &\le \frac{1+\varepsilon}{k+1}u_k p((1+\varepsilon)u_k) \le \frac{1+\varepsilon}{k}u_k p(u_k) \end{aligned}$$

(see Graph 1.1, p. 8), we also have

$$\lim_k N(p(u_k))/[u_k p((1+\varepsilon)u_k)] = r. \tag{2.20}$$

Define

$$\theta = \sum_{k=1}^{\infty} N\left(p\left(\frac{\varepsilon}{4}u_k\right)\right) \Big/ \left[\frac{\varepsilon}{4}u_k p\left(\frac{\varepsilon}{4}u_k\right)2^k\right].$$

Then $0 < \theta \le 1$. Let $\beta = \varepsilon/(\theta\varepsilon + 4r)$. Without loss of generality, we may assume

$$\frac{\varepsilon}{4}u_1 p\left(\frac{\varepsilon}{4}u_1\right)\mu G \ge \beta.$$

Hence, there exist disjoint $G_k \in \Sigma$ $(k \in \mathbb{N})$ such that

$$\frac{\varepsilon}{4}u_k p\left(\frac{\varepsilon}{4}u_k\right)\mu G_k = 2^{-k}\beta,$$

so that

$$\sum_{k=1}^{\infty} \frac{\varepsilon}{4}u_k p\left(\frac{\varepsilon}{4}u_k\right)\mu G_k = \beta, \qquad \sum_{k=1}^{\infty} N\left(p\left(\frac{\varepsilon}{4}u_k\right)\right)\mu G_k = \theta\beta < 1.$$

Since (1.5) and (2.18) imply

$$\begin{aligned} N(p(u_n))\mu G_n &> \frac{1}{2}p(u_n)q\left(\frac{p(u_n)}{2}\right)\mu G_n \\ &\ge n2^{n-1}p(\varepsilon u_n)q(p(\varepsilon u_n))\mu G_n > n\beta, \end{aligned}$$

we may choose, for all large n, $E_n \in \Sigma$ contained in G_n satisfying

$$N(p(u_n))\mu E_n = 1 - \theta\beta + N\left(p\left(\frac{\varepsilon}{4}u_n\right)\right)\mu E_n \tag{2.21}$$

(clearly, $\mu E_n/\mu G_n \to 0$ as $n \to \infty$). Let $F_n = G_n \setminus E_n$ and define

$$
\begin{aligned}
k_n &= \sum_{k\neq n} \frac{\varepsilon}{4} u_k p\left(\frac{\varepsilon}{4}u_k\right)\mu G_k + \frac{\varepsilon}{4} u_n p\left(\frac{\varepsilon}{4}u_n\right)\mu F_n \\
&\quad + \left(1+\frac{3}{4}\varepsilon\right) u_n p(u_n)\mu E_n, \\
h_n &= \sum_{k\neq n} \frac{\varepsilon}{4} u_k p\left(\frac{\varepsilon}{4}u_k\right)\mu G_k + \frac{\varepsilon}{4} u_n p\left(\frac{\varepsilon}{4}u_n\right)\mu F_n \\
&\quad + \left(1+\frac{\varepsilon}{2}\right) u_n p(u_n)\mu E_n.
\end{aligned}
$$

Obviously, by (2.18)–(2.21),

$$
\begin{aligned}
k = \lim_n k_n &= \beta + \lim_n \left(1+\frac{3}{4}\varepsilon\right) u_n p(u_n)\mu E_n \\
&= \beta + \frac{1}{r}\left(1+\frac{3}{4}\varepsilon\right) \lim_n N(p(u_n))\mu E_n \\
&= \beta + \frac{1}{r}\left(1+\frac{3}{4}\varepsilon\right)(1-\theta\beta) = \frac{1}{r}(1+\varepsilon)(1-\theta\beta),
\end{aligned}
$$

$$
h = \lim_n h_n = \beta + \frac{1}{r}\left(1+\frac{\varepsilon}{2}\right)(1-\varepsilon\beta) = \frac{1}{r}\left(1+\frac{3}{4}\varepsilon\right)(1-\theta\beta).
$$

Define

$$
\begin{aligned}
x_n &= \frac{1}{k_n}\left[\sum_{k\neq n} \frac{\varepsilon}{4} u_k \chi_{G_k} + \frac{\varepsilon}{4} u_n \chi_{F_n} - \left(1+\frac{3}{4}\varepsilon\right) u_n \chi_{E_n}\right], \\
y_n &= \frac{1}{h_n}\left[\sum_{k\neq n} \frac{\varepsilon}{4} u_k \chi_{G_k} + \frac{\varepsilon}{4} u_n \chi_{F_n} - \left(1+\frac{\varepsilon}{2}\right) u_n \chi_{E_n}\right], \\
v_n &= \sum_{k\neq n} p\left(\frac{\varepsilon}{4}u_k\right)\chi_{G_k} + p\left(\frac{\varepsilon}{4}u_n\right)\chi_{F_n} - p(u_n)\chi_{E_n}.
\end{aligned}
$$

Then by (2.21), $\varrho_N(v_n) = 1$ and thus, (2.19) and (2.20) imply

$$
\begin{aligned}
\limsup_n \|x_n\|^o &\le \limsup_n \frac{1}{k_n}[1+\varrho_M(k_n x_n)] \\
&= \limsup_n \frac{1}{k_n}[\varrho_N(v_n) + \varrho_M(k_n x_n)] \\
&= \lim_n \frac{1}{k_n}\left[\sum_{k=1}^{\infty} \frac{\varepsilon}{4} u_k p\left(\frac{\varepsilon}{4}u_k\right)\mu G_k + \left(1+\frac{3}{4}\varepsilon\right) u_n p(u_n)\mu E_n\right] = 1.
\end{aligned}
$$

Similarly, we have $\limsup_n \|y_n\|^o \le 1$ and

$$
\liminf_n \|x_n + y_n\|^o \ge \liminf_n \langle v_n, x_n + y_n\rangle = \lim_n \left[\frac{1}{k_n}\langle v_n, k_n x_n\rangle + \frac{1}{h_n}\langle v_n, h_n y_n\rangle\right] = 2.
$$

But if we let

$$
y_n'(t) = \frac{(1+\varepsilon)h_n}{(1+3\varepsilon/4)k_n} y_n(t),
$$

then $\|y_n' - y_n\|^o \to 0$ and

$$y_n' - x_n = \frac{1}{k_n}\left[\frac{1+\varepsilon}{1+3\varepsilon/4} - 1\right]\frac{\varepsilon}{4}\sum_{k=1}^{\infty} u_k\chi_{G_k} \to \frac{1}{k}\frac{\varepsilon^2}{12\varepsilon+16}\sum_{k=1}^{\infty} u_k\chi_{G_k},$$

contradicting the URED of L_M^o. ■

COROLLARY 2.36. *If M is strictly convex and $M \in \Delta_2$ or for any $\varepsilon > 0$, there exists $\gamma > 0$ such that $p((1+\varepsilon)u) \le (1+\gamma)p(u)$ for all large u, then L_M^o is URED.*

Proof. If M is strictly convex and for any $\varepsilon > 0$, there exists $\gamma > 0$ such that $p((1+\varepsilon)u) \le (1+\gamma)p(u)$, then by Theorem 2.33, L_M^o is URED.

Now, suppose that M is strictly convex and $M \in \Delta_2$. For any $l > 1$, we can find $K > 1$ such that $M(2lu) \le KM(u)$ for all large u. Hence, for all large u, by (1.5),

$$2lp(lu) \le \frac{2lM(2lu)}{2lu} \le \frac{KM(u)}{u} \le Kp(u).$$

It follows from Theorem 2.33 that L_M^o is URED. ■

2.5. Uniform k-rotundity. Let X be a Banach space. If for any $x_n, y_n \in B(X)$, $\|x_n + y_n\| \to 2$ implies $\|x_n - y_n\| \to 0$, then X is called a *uniformly rotund* (UR) space. X is called *uniformly k-rotund* (UkR) ($k \ge 1$) provided that for any $\varepsilon > 0$, there exists $\delta > 0$ such that $x_0, x_1, \ldots, x_k \in B(X)$ and $\|x_0 + x_1 + \ldots + x_k\| \ge k + 1 - \delta$ imply

$$\Delta(x_0, \ldots, x_k) = \sup_{\substack{f_i \in B(X^*)\\ i \le k}} \begin{vmatrix} 1 & 1 & \ldots & 1 \\ f_1(x_0) & f_1(x_1) & \ldots & f_1(x_k) \\ \cdots & \cdots & \cdots & \cdots \\ f_k(x_0) & f_k(x_1) & \ldots & f_k(x_k) \end{vmatrix} < \varepsilon.$$

Clearly, UR $\Leftrightarrow$ U1R $\Rightarrow$ UkR $\Rightarrow$ U$(k+1)$R ($k > 1$).

THEOREM 2.37. *For any $k \ge 1$, L_M or L_M^o is UkR iff* (i) *$M \in \Delta_2$ and* (ii) *M is uniformly convex.*

Proof. We only consider L_M^o, the other one is analogous, but easier to prove.

Sufficiency. Let $x_n, y_n \in S(L_M^o)$ satisfy $\|x_n + y_n\|^o \to 2$ and $K(x_n) = \{k_n\}, K(y_n) = \{h_n\}$. Since the uniform convexity of M implies $M \in \nabla_2$, by Theorem 1.35, $1 < d = \sup_n\{k_n, h_n\} < \infty$. Set

$$a = \inf_n\left\{\frac{k_n}{k_n+h_n}, \frac{h_n}{k_n+h_n}\right\}, \qquad b = \sup_n\left\{\frac{k_n}{k_n+h_n}, \frac{h_n}{k_n+h_n}\right\}.$$

Then $[a,b] \subset (0,1)$. For any $u' > 0$ and $0 < \varepsilon < 1/2$, since M is uniformly convex, by Proposition 1.3 (3), there exists $\delta > 0$ such that $\lambda \in [a,b]$ and $|u - v| \ge \varepsilon\max\{|u|, |v|\} \ge \varepsilon u'$ imply

$$M(\lambda u + (1-\lambda)v) \le (1-\delta)[\lambda M(u) + (1-\lambda)M(v)].$$

For each $n \in \mathbb{N}$, let

$$\begin{aligned} G_n &= \{t \in G : |k_n x_n(t)|, |h_n y_n(t)| < u'\}, \\ E_n &= \{t \in G : |kx(t) - h_n y_n(t)| < \varepsilon\max(|k_n x_n(t)|, |h_n y_n(t)|)\}, \\ F_n &= \{t \in G : |k_n x_n(t) - h_n y_n(t)| \ge \varepsilon\max(|k_n x_n(t)|, |h_n y_n(t)|) \ge \varepsilon u'\}. \end{aligned}$$

Then from $k_nh_n/(k_n+h_n) \le d/2$ and $\varrho_M(k_nx_n)+\varrho_M(h_ny_n) = k_n+h_n-2$, we deduce

$$\int_{G_n} M(k_nx_n(t)-h_ny_n(t))\,dt \le \int_{G_n} M(2u')\,dt \le M(2u')\mu G$$

and

$$\begin{aligned}\int_{E_n} M(k_nx_n(t)-h_ny_n(t))\,dt &\le 2\varepsilon \int_{E_n} M\left(\frac{|k_nx_n(t)|+|h_ny_n(t)|}{2}\right)dt\\ &\le \varepsilon \int_{E_n} [M(k_nx_n(t))+M(h_ny_n(t))]\,dt \le \varepsilon(2d-2) < 2\varepsilon d.\end{aligned}$$

Furthermore, if we define $f_n(t)$ as in (2.6), then as in the proof of Lemma 2.26,

$$\begin{aligned}0 = 2-\|x_n\|^o-\|y_n\|^o &\ge \int_G f_n(t)\,dt\\ &\ge \delta \int_{F_n}\left[\frac{1}{k_n}M(k_nx_n(t))+\frac{1}{h_n}M(h_ny_n(t))\right]dt\\ &\ge 2\delta \int_{F_n} M\left(\frac{k_nx_n(t)-h_ny_n(t)}{2}\right)dt.\end{aligned}$$

It follows from $M\in\Delta_2$ that $\|(k_nx_n-h_ny_n)|_{F_n}\|^o \to 0$. Combine this with the arbitrariness of u' and ε to derive $\|k_nx_n-h_ny_n\|^o\to 0$. This implies $\|x_n-y_n\|^o\to 0$ since $k_n-h_n = \|k_nx_n\|^o-\|h_ny_n\|^o\to 0$.

Necessity. Since k-uniformly rotund Banach spaces are reflexive, we have $M\in\Delta_2$. Moreover, by Theorem 2.11, M is strictly convex. If M is not uniformly convex, then by the proof of Lemma 1.17, there exist $\varepsilon>0$ and $u_n\uparrow\infty$ such that

$$p((1+\varepsilon)u_n) < (1+1/n)p(u_n) \qquad (n\in\mathbb{N}). \tag{2.22}$$

Without loss of generality, we assume $N(p(u_1))\mu G\ge 1$. Pick $G^n\in\Sigma$ such that

$$[kN(p(u_n))+N(p((1+\varepsilon)u_n))]\mu G^n = k+1 \tag{2.23}$$

and set

$$k_n = \frac{1}{k+1}[ku_np(u_n)+(1+\varepsilon)u_np((1+\varepsilon)u_n)]\mu G^n.$$

Then we partition G^n into $\{G_i^n\}_{i=0}^k$ such that $\mu G_i^n = \frac{1}{k+1}\mu G^n$ $(i=0,1,\dots,k)$ and define

$$x_0^n = \frac{1}{k_n}\Big[u_n\sum_{j=0}^{k-1}\chi_{G_j^n}+(1+\varepsilon)u_n\chi_{G_k^n}\Big], \qquad x_i^n = \frac{1}{k_n}\Big[u_n\sum_{j\ne i}\chi_{G_j^n}+(1+\varepsilon)u_n\chi_{G_i^n}\Big],$$

for $i=1,\dots,k$, $n\in\mathbb{N}$. Clearly, $\varrho_N(p(k_nx_i^n))=1$ and thus, $\|x_i^n\|^o = \langle p(k_nx_i^n),x_i^n\rangle = 1$. Define $v_n = p(u_n)\chi_{G^n}$. Then $\varrho_N(v_n)\le 1$ and so,

$$\begin{aligned}\frac{1}{k+1}\Big\|\sum_{i=0}^k x_i^n\Big\|^o &\ge \frac{1}{k+1}\Big\langle v_n,\sum_{i=0}^k x_i^n\Big\rangle\\ &= \frac{1}{(k+1)k_n}[ku_np(u_n)\mu G^n+(1+\varepsilon)u_np(u_n)\mu G^n]\\ &\ge \left(1+\frac{1}{n}\right)^{-1}\frac{1}{(k+1)k_n}[ku_np(u_n)+(1+\varepsilon)u_np((1+\varepsilon)u_n)]\mu G^n\\ &= (1+1/n)^{-1}\to 1.\end{aligned}$$

Let $c_n = (k+1)^{-1}\mu G^n, \alpha_n = N^{-1}(1/c_n)$ and $b = [(k+1)(1+\varepsilon)]^{-1}$. Then by (2.23), $N(p(u_n))\mu G^n \le 1$, so $p(u_n) \le N^{-1}(1/\mu G^n) \le \alpha_n$. Hence, (2.22) and (2.23) imply

$$1 \le (1+\varepsilon)u_n p((1+\varepsilon)u_n)\mu G^n \le 2(1+\varepsilon)u_n p(u_n)\mu G^n \le 2(1+\varepsilon)(k+1)c_n\alpha_n u_n.$$

Define $g_i^n = \alpha_n \chi_{G_i^n}$. Then $\|g_i^n\|_N = 1$, $i = 1, \ldots, k$, $n \in \mathbb{N}$. Let

$$\Delta_n = \begin{vmatrix} 1 & 1 & \ldots & 1 \\ g_1^n(x_0^n) & g_1^n(x_1^n) & \ldots & g_1^n(x_k^n) \\ \ldots & \ldots & \ldots & \ldots \\ g_k^n(x_0^n) & g_k^n(x_1^n) & \ldots & g_k^n(x_k^n) \end{vmatrix}.$$

Subtracting the first column from all other columns in the determinant and expanding it by the first row, we calculate

$$\Delta_n = (\varepsilon\alpha_n c_n u_n)^k \ge \left(\frac{\varepsilon}{2(1+\varepsilon)(k+1)}\right)^k,$$

which shows that L_M^o is not UkR. ■

THEOREM 2.38. *Let $k \ge 1$ be an integer.*

(i) *l_M is UkR iff $M \in \Delta_2$ and M is uniformly convex on $[0, M^{-1}(1/(k+1))]$.*
(ii) *l_M^o is UkR iff $M \in \Delta_2$ and M is uniformly convex on $[0, \pi_M(1/k)]$.*

Before proving the theorem, we present a lemma.

LEMMA 2.39. *The following are equivalent*:

(1) *M is uniformly convex on $[0,a]$, i.e., for any $\varepsilon > 0$, there exists $\delta > 0$ such that $u, v \in [0,a]$ and $|u-v| \ge \varepsilon \max\{|u|,|v|\}$ imply*

$$M\left(\frac{u+v}{2}\right) \le (1-\delta)\frac{M(u)+M(v)}{2}.$$

(2) *For any $\beta \in [0,a]$, $b \ge a$ and $\varepsilon > 0$, there exists $\delta > 0$ such that $\max\{u,v\} \le b$, $0 \le \min\{u,v\} \le \beta$ and $|u-v| \ge \varepsilon \max\{u,v\}$ imply*

$$M\left(\frac{u+v}{2}\right) \le (1-\delta)\frac{M(u)+M(v)}{2}.$$

(3) *For any integer $m \ge 2$, $\beta \in [0,a)$, $b \ge a$ and $\varepsilon > 0$, there exists $\delta > 0$ such that $\max\{u_j : 1 \le j \le m\} \le b$, $0 \le \min\{u_j : 1 \le j \le m\} \le \beta$ and*

$$\max\{|u_n - u_j| : 1 \le n, j \le m\} \ge \varepsilon \max\{u_j : 1 \le j \le m\}$$

imply

$$M\left(\frac{1}{m}\sum_{j=1}^m u_j\right) \ge (1-\delta)\frac{1}{m}\sum_{j=1}^m M(u_j).$$

Proof. An easy exercise. ■

Proof of Theorem 2.38. We only prove (i) and leave (ii) to the reader.

Necessity. Since UkR spaces are reflexive and k-rotund, it follows that $M \in \Delta_2$ and M is strictly convex on $[0, M^{-1}(1/(k+1))]$ by Theorem 2.11. Hence, if M is not uniformly

convex on $[0, M^{-1}(1/(k+1))]$, then there exist $\varepsilon > 0$ and $u_n \downarrow 0, v_n \downarrow 0$ such that $u_n - v_n \geq \varepsilon u_n$ and

$$M\left(\frac{u_n + v_n}{2}\right) \geq \left(1 - \frac{1}{n}\right)\frac{M(u_n) + M(v_n)}{2} \qquad (n \in \mathbb{N}).$$

Define $w_n = (2k)^{-1}[(k-1)u_n + (k+1)v_n]$. Then $M(v_n) \leq M(w_n) < M(u_n)$. For every $n \in \mathbb{N}$, choose an integer m_n such that

$$m_n[M(u_n) + kM(w_n)] \leq 1, \qquad (m_n + 1)[M(u_n) + kM(w_n)] > 1.$$

Then there exists $t_n \geq 0$ such that

$$m_n[M(u_n) + kM(w_n)] + M(t_n) = 1.$$

Clearly, $t_n \to 0$ as $n \to \infty$. Define

$$\begin{aligned}
x_{0,n} &= (\overbrace{w_n, \ldots, w_n}^{km_n}, \overbrace{u_n, \ldots, u_n}^{m_n}, t_n, 0, 0, \ldots),\\
x_{1,n} &= (\overbrace{u_n, \ldots, u_n}^{m_n}, \overbrace{w_n, \ldots, w_n}^{km_n}, t_n, 0, 0, \ldots),\\
x_{2,n} &= (\overbrace{w_n, \ldots, w_n}^{m_n}, \overbrace{u_n, \ldots, u_n}^{m_n}, \overbrace{w_n, \ldots, w_n}^{(k-1)m_n}, t_n, 0, 0, \ldots),\\
&\vdots\\
x_{k-1,n} &= (\overbrace{w_n, \ldots, w_n}^{(k-2)m_n}, \overbrace{u_n, \ldots, u_n}^{m_n}, \overbrace{w_n, \ldots, w_n}^{2m_n}, t_n, 0, 0, \ldots),\\
x_{k,n} &= (\overbrace{w_n, \ldots, w_n}^{(k-1)m_n}, \overbrace{u_n, \ldots, u_n}^{m_n}, \overbrace{w_n, \ldots, w_n}^{m_n}, t_n, 0, 0, \ldots).
\end{aligned}$$

Then $\varrho_M(x_{j,n}) = 1,\ j = 0, 1, \ldots, k,\ n \in \mathbb{N}$, and

$$\begin{aligned}
\varrho_M\left(\frac{1}{k+1}\sum_{j=0}^{k} x_{j,n}\right) &= (k+1)m_n M\left(\frac{u_n + v_n}{2}\right) + M(t_n)\\
&> (k+1)\left(1 - \frac{1}{n}\right)\frac{m_n}{2}[M(u_n) + M(v_n)] + M(t_n)\\
&\geq (1 - 1/n)[m_n M(u_n) + km_n M(w_n) + M(t_n)] = 1 - 1/n \to 1.
\end{aligned}$$

This implies $\|x_{0,n} + \ldots + x_{k,n}\| \to k + 1$.

Now, we estimate $\Delta(x_{0,n}, \ldots x_{k,n})$. Set $c_n = [m_n M^{-1}(1/m_n)]^{-1}$ and

$$f_{j,n} = (\overbrace{0, \ldots, 0}^{(j-1)m_n}, \overbrace{c_n, \ldots, c_n}^{m_n}, 0, 0, \ldots) \qquad (j = 1, \ldots, k, n \in \mathbb{N}).$$

Then by Example 1.22, $\|f_{j,n}\|_N^o = 1$ and hence, by the same method as in the proof of Theorem 2.37, we calculate

$$\begin{aligned}
\Delta(x_{0,n}, \ldots, x_{k,n}) &\geq \begin{vmatrix} 1 & 1 & \ldots & 1\\ f_{1,n}(x_{0,n}) & f_{1,n}(x_{1,n}) & \ldots & f_{1,n}(x_{k,n})\\ \ldots & \ldots & \ldots & \ldots\\ f_{k,n}(x_{0,n}) & f_{k,n}(x_{1,n}) & \ldots & f_{k,n}(x_{k,n}) \end{vmatrix} = [c_n m_n(u_n - w_n)]^k\\
&= \left[\frac{k+1}{2k} c_n m_n (u_n - v_n)\right]^k \geq \left[\frac{k+1}{2k}\varepsilon c_n m_n u_n\right]^k.
\end{aligned}$$

Since $t_n \to 0$, we may assume $m_n(k+1)M(u_n) > 1/2$. Therefore,

$$c_n m_n u_n = \frac{u_n}{M^{-1}(1/m_n)} > \frac{u_n}{M^{-1}(2(k+1)M(u_n))} > \frac{1}{2(k+1)}.$$

This leads to a contradiction:

$$0 \leftarrow \Delta(x_{0,n}, \dots, x_{k,n}) \geq \left[\frac{(k+1)\varepsilon}{4k(k+1)}\right]^k = \left(\frac{\varepsilon}{4k}\right)^k.$$

Sufficiency. Let $x_{0,n}, \dots, x_{k,n} \in S(l_M)$ and $\varrho_M\big(\frac{1}{k+1}\sum_{j=0}^k x_{j,n}\big) \to 1$ as $n \to \infty$. We have to prove that for any $\gamma > 0$, $\Delta_n = \Delta(x_{0,n}, \dots, x_{k,n}) \leq O(\gamma)$ as $n \to \infty$.

Select $\varepsilon > 0$ such that $(k+1)\varepsilon < 1$, and

$$\varrho_M(z) \leq (k+1)\varepsilon \Rightarrow \|z\| < \gamma$$

and

$$\varrho_M(x) \leq 1, \varrho_M(y) \leq (k+2)\varepsilon \Rightarrow |\varrho_M(x+y) - \varrho_M(x)| < \gamma$$

(the existence of such an ε results from Theorem 1.23 and Lemma 1.40).

Next, we choose $\beta \in (0, M^{-1}(1/(k+1)))$ such that $kM(\beta) + M((1+\varepsilon)\beta) > 1$ and define

$$\begin{aligned} I_n &= \{i \in \mathbb{N} : \max_{j,k}\{|x_{j,n}(i) - x_{k,n}(i)|\} < \varepsilon \max_j\{|x_{j,n}(i)|\}\}, \\ J_n &= \{i \in \mathbb{N} \setminus I_n : (x_{j,n}(i))_j \text{ have different signs,} \\ &\qquad\qquad \text{or the same signs but } \min_j\{|x_{j,n}(i)|\} \leq \beta\}, \\ K_n &= \mathbb{N} \setminus (I_n \cup J_n). \end{aligned}$$

We shall estimate

$$\begin{aligned} \Delta_n &= \sup_{\substack{\|y_j\|_N^o \leq 1 \\ j=1,\dots,k}} \begin{vmatrix} 1 & 1 & \dots & 1 \\ \langle y_1, x_{0,n}\rangle & \langle y_1, x_{1,n}\rangle & \dots & \langle y_1, x_{k,n}\rangle \\ \dots & \dots & \dots & \dots \\ \langle y_k, x_{0,n}\rangle & \langle y_k, x_{1,n}\rangle & \dots & \langle y_k, x_{k,n}\rangle \end{vmatrix} \\ &= \sup_{\substack{\|y_j\|_N^o \leq 1 \\ j=1,\dots,k}} \begin{vmatrix} \sum_{i=1}^\infty y_1(i)[x_{1,n}(i) - x_{0,n}(i)] & \dots & \sum_{i=1}^\infty y_1(i)[x_{k,n}(i) - x_{0,n}(i)] \\ \dots & \dots & \dots \\ \sum_{i=1}^\infty y_k(i)[x_{1,n}(i) - x_{0,n}(i)] & \dots & \sum_{i=1}^\infty y_k(i)[x_{k,n}(i) - x_{0,n}(i)] \end{vmatrix} \end{aligned}$$

in three steps.

First, by the choice of I_n and ε,

$$\begin{aligned} \varrho_M((x_{j,n} - x_{0,n})|_{I_n}) &= \sum_{i \in I_n} M(x_{j,n}(i) - x_{0,n}(i)) \leq \sum_{i \in I_n} M(\varepsilon(|x_{0,n}(i)| + \dots + |x_{j,n}(i)|)) \\ &\leq (k+1)\varepsilon \sum_{i \in I_n} M\left(\frac{1}{k+1}\sum_{j=0}^k |x_{j,n}(i)|\right) \leq \sum_{j=0}^k \varrho_M(x_{j,n}) = (k+1)\varepsilon \end{aligned}$$

for $j = 0, 1, \dots, k$. Hence,

$$\Big|\sum_{i \in I_n} y_h(i)[x_{j,n}(i) - x_{0,n}(i)]\Big| \leq \|(x_{j,n} - x_{0,n})|_{In}\| < \gamma \quad (j = 1, \dots, k,\ h = 1, \dots, k,\ n \in \mathbb{N}).$$

Second, we show $\varrho_M((x_{j,n} - x_{0,n})|_{J_n}) \to 0$ as $n \to \infty$ for each $j = 1, \dots, k$. Indeed, applying Lemma 2.39, we can easily deduce the existence of $\delta > 0$ such that

$$M\left(\frac{1}{k+1}\sum_{j=0}^{k} x_{j,n}(i)\right) \le \frac{1-\delta}{k+1}\sum_{j=0}^{k} M(x_{j,n}(i))$$

for all $i \in J_n$ no matter if $\{x_{j,n}(i)\}_j$ have the same signs, or different signs but $\min\{|x_{j,n}(i)| : j = 0, 1, \dots, k\} \le \beta$. Hence,

$$\begin{aligned}
0 &\leftarrow \frac{1}{k+1}\sum_{j=0}^{k} \varrho_M(x_{j,n}) - \varrho_M\left(\frac{1}{k+1}\sum_{j=0}^{k} x_{j,n}\right) \\
&\ge \sum_{i\in J_n}\left[\frac{1}{k+1}\sum_{j=0}^{k} M(x_{j,n}(i)) - M\left(\frac{1}{k+1}\sum_{j=0}^{k} x_{j,n}(i)\right)\right] \\
&\ge \frac{\delta}{k+1}\sum_{i\in J_n}\sum_{j=0}^{k} M(x_{j,n}(i)) \\
&\ge \frac{2\delta}{k+1}\sum_{i\in J_n}\frac{M(x_{j,n}(i)) + M(-x_{0,n}(i))}{2} \\
&\ge \frac{2\delta}{k+1}\varrho_M\left(\frac{x_{j,n} - x_{0,n}}{2}\bigg|_{J_n}\right) \qquad (j = 1, \dots, k).
\end{aligned} \tag{2.24}$$

This implies $\varrho_M((x_{j,n} - x_{0,n})|_{J_n}) \to 0$ as $n \to \infty$ for each $j = 1, \dots, k$ since $M \in \Delta_2$. Therefore, for all large n,

$$|\langle y_h, (x_{j,n} - x_{0,n})|_{J_n}\rangle| \le \|(x_{j,n} - x_{0,n})|_{J_n}\| < \gamma$$

for all $h = 1, \dots, k$ and $j = 1, \dots, k$.

Finally, we claim that K_n contains no more than k different numbers. In fact, if this is not true, then we may assume $1, \dots, k+1 \in K_n$, $x_{0,n}(1) = \max_{j\le k} |x_{j,n}(1)|$, and $x_{1,n}(1) = \min_{j\le k} |x_{j,n}(1)|$. From the definition of K_n, we have $x_{1,n}(1) \ge \beta$ and $x_{0,n}(1) - x_{1,n}(1) \ge \varepsilon x_{0,n}(1)$, so that $x_{0,n}(1) \ge (1+\varepsilon)\beta$. Combining this with the choice of β, we obtain a contradiction:

$$1 = \varrho_M(x_{0,n}) \ge \sum_{j=0}^{k} M(x_{0,n}(j)) > M((1+\varepsilon)\beta) + kM(\beta) > 1.$$

Hence, without loss of generality, we assume $K_n = \{1, \dots, k\}$ for all $n \ge 1$ and $\lim_n x_{j,n}(i) = a_j(i)$, $j = 0, 1, \dots, k$, $i = 1, \dots, k$ (passing to a subsequence if necessary). Since the first two steps imply

$$\Delta_n \le \sup_{y_j}\begin{vmatrix} \langle y_1, (x_{1,n} - x_{0,n})|_{K_n}\rangle & \dots & \langle y_1, (x_{k,n} - x_{0,n})|_{K_n}\rangle \\ \dots & \dots & \dots \\ \langle y_k, (x_{1,n} - x_{0,n})|_{K_n}\rangle & \dots & \langle y_k, (x_{k,n} - x_{0,n})|_{K_n}\rangle \end{vmatrix} + O(\gamma),$$

we deduce

$$\Delta_n \le \sup_{y_j}\begin{vmatrix} \sum_{i=1}^{k} y_1(i)(a_1(i) - a_0(i)) & \dots & \sum_{i=1}^{k} y_1(i)(a_k(i) - a_0(i)) \\ \dots & \dots & \dots \\ \sum_{i=1}^{k} y_k(i)(a_1(i) - a_0(i)) & \dots & \sum_{i=1}^{k} y_k(i)(a_k(i) - a_0(i)) \end{vmatrix} + O(\gamma).$$

Noticing that (2.24) implies

$$\sum_{i=1}^{\infty}\left\{\frac{1}{k+1}\sum_{j=0}^{k}M(x_{j,n}(i))-M\left(\frac{1}{k+1}\sum_{j=0}^{k}x_{j,n}(i)\right)\right\}\to 0$$

as $n\to\infty$, we find

$$\frac{1}{k+1}\sum_{j=0}^{k}M(a_j(i))=M\left(\frac{1}{k+1}\sum_{j=0}^{k}a_j(i)\right)\qquad (i=1,\ldots,k),$$

which shows that $(a_j(i))_j$ are in the same SAI of M, $i=1,\ldots,k$. Say $M(u)=\alpha_i u+\beta_i$ on such an interval, $i=1,\ldots,k$.

Since the first two steps prove $\varrho_M((x_{j,n}-x_{0,n})|_{I_n\cup J_n})<(k+2)\varepsilon$, $j=1,\ldots,k$, when n is large enough, the choice of ε implies $|\varrho_M(x_{j,n}|_{I_n\cup J_n})-\varrho_M(x_{0,n}|_{I_n\cup J_n})|<\gamma, j=1,\ldots,k$. It follows from $\varrho_M(x_{j,n})=1$ that $|\varrho_M(x_{j,n}|_{K_n})-\varrho_M(x_{0,n}|_{K_n})|<\gamma$ for all large n. Letting $n\to\infty$, we derive

$$\Big|\sum_{i=1}^{k}\alpha_i(a_j(i)-a_0(i))\Big|\le\gamma.$$

Thus,

$$a_j(i)-a_0(1)\le-\frac{1}{\alpha_1}\Big|\sum_{i=2}^{k}\alpha_i(a_j(i)-a_0(i))\Big|+\frac{\gamma}{\alpha_1}\qquad (j=1,\ldots,k).$$

Noticing that $0<M'(\beta)<M'(a_j(i))=\alpha_i\le M'(M^{-1}(1))$, $i=1,\ldots,k$, it is easy to deduce that

$$\Delta_n=\sup_{y_j}\begin{vmatrix}\sum_{i=2}^{k}\big(y_1(i)-\frac{\alpha_i}{a_1}y_1(1)\big)(a_1(i)-a_0(i)) & \ldots & \sum_{i=2}^{k}\big(y_1(i)-\frac{\alpha_i}{a_1}y_1(1)\big)(a_k(i)-a_0(i))\\ \cdots & \cdots & \cdots\\ \sum_{i=2}^{k}\big(y_k(i)-\frac{\alpha_i}{a_1}y_k(1)\big)(a_1(i)-a_0(i)) & \ldots & \sum_{i=2}^{k}\big(y_k(i)-\frac{\alpha_i}{a_1}y_k(1)\big)(a_k(i)-a_0(i))\end{vmatrix}+O(\gamma).$$

Expand the determinant into $(k-1)^{k-1}$ determinants of order k. Then each of them has the form

$$\begin{vmatrix}\big(y_1(s_1)-\frac{\alpha_{s_1}}{\alpha_1}y_1(1)\big)(a_1(s_1)-a_0(s_1)) & \ldots & \big(y_1(s_k)-\frac{\alpha_{s_k}}{\alpha_1}y_1(1)\big)(a_k(s_k)-a_0(s_k))\\ \cdots & \cdots & \cdots\\ \big(y_k(s_1)-\frac{\alpha_{s_1}}{\alpha_1}y_k(1)\big)(a_1(s_1)-a_0(s_1)) & \ldots & \big(y_k(s_k)-\frac{\alpha_{s_k}}{\alpha_1}y_k(1)\big)(a_k(s_k)-a_0(s_k))\end{vmatrix}.$$

Since each s_i is between 2 and k, each such determinant has at least two columns proportional. Therefore, it vanishes and thus, $\Delta_n\le O(\gamma)$. ∎

2.6. Full convexity and weakly uniform rotundity. Let $k\ge 2$ be an integer. A normed space X is said to be *fully k-convex* (kC) if for every sequence $\{x_n\}$ in $B(X)$, $\|x_{n_1}+\ldots+x_{n_k}\|\to k$ as $n_1,\ldots,n_k\to\infty$ implies that $\{x_n\}$ is a Cauchy sequence. It is known that UR $\Rightarrow k$C $\Rightarrow (k+1)$C ($k\ge 2$), and kC spaces are reflexive and rotund.

THEOREM 2.40. *Let $X=L_M, L_M^o, l_M$ or l_M^o. Then X is kC iff it is reflexive and rotund.*

Before proving the theorem, we introduce a lemma.

Let $\{x_n\}$ be a sequence in an Orlicz function space. We say that $\{x_n\}$ is *norm equi-continuous* if for any $\varepsilon > 0$, there exists $\delta > 0$ such that $\mu E < \delta$ implies $\|x_n|_E\| < \varepsilon$ for every $n \in \mathbb{N}$. If $\{x_n\}$ is a sequence in an Orlicz sequence space, then it is called *norm equi-continuous* provided that for any $\varepsilon > 0$, there exists $i' \in \mathbb{N}$ such that $\|x_n|_I\| < \varepsilon$ for all $n \in \mathbb{N}$, where $I = \{i \in \mathbb{N} : i \geq i'\}$.

LEMMA 2.41. *Suppose that $\{x_n\}_{n\geq 0}$ is a sequence in an Orlicz function* (*or sequence*) *space. If it is norm equi-continuous and $x_n \to x_0$ in measure* (*coordinatewise for sequence spaces*), *then $x_n \to x_0$ in norm.*

Proof. An easy exercise. ■

Proof of Theorem 2.40. We only need to show the sufficiency. Let $\{x_n\}$ be a sequence in $B(X)$ such that the norm of $x_n + x_m$ tends to 2 as $n, m \to \infty$. Applying Lemma 2.27, we can easily deduce that $\{x_n\}$ is norm equi-continuous. Observing that Lemma 2.26 implies that $x_n \to x_0$ in measure (coordinatewise for sequence spaces) for some $x_0 \in X$, the conclusion follows from Lemma 2.41. ■

A Banach space X is called *weakly uniformly rotund* (WUR) if $x_n, y_n \in B(X)$ and $\|x_n + y_n\| \to 2$ imply $x_n - y_n \to 0$ weakly. X^* is said to be *weak* uniformly rotund* (W*UR) if $x_n, y_n \in S(X^*)$ and $\|x_n + y_n\| \to 2$ imply $x_n - y_n \xrightarrow{w^*} 0$.

THEOREM 2.42. *L_M^o or l_M^o is WUR iff it is UR.*

Proof. The sufficiency is trivial.

Necessity. We only consider L_M^o. The proof for l_M^o is analogous. By Theorem 2.28, $M \in \Delta_2 \cap \nabla_2$ and M is strictly convex. If M is not uniformly convex, then there exist ε in $(0, 1)$ and $u_n \uparrow \infty$ such that

$$p((1+\varepsilon)u_n) < (1 + 1/n)p(u_n).$$

Pick $a > 0$ and $A \in \Sigma$ such that $\mu A < \mu G$ and $N(p(a))\mu A = 1/2$. Without loss of generality, we may assume $N(p(u_n))\mu(G \setminus A) \geq 1/2$. Choose G_n in $G \setminus A$ such that $N(p(u_n))\mu G_n = 1/2$ and define

$$k_n = (1+\varepsilon)u_n p((1+\varepsilon)u_n)\mu G_n + ap(a)\mu A, \qquad x_n = \frac{1}{k_n}[(1+\varepsilon)u_n\chi_{G_n} + a\chi_A],$$
$$h_n = u_n p(u_n)\mu G_n + ap(a)\mu A, \qquad y_n = \frac{1}{h_n}[u_n\chi_{G_n} + a\chi_A].$$

Then since $\varrho_N(p(k_n x_n)) > \varrho_N(p(h_n y_n)) = N(p(u_n))\mu G_n + N(p(a)) = 1/2 + 1/2 = 1$, we have

$$\|y_n\|^o = \langle p(h_n y_n), y_n\rangle = 1,$$
$$\|x_n\|^o \leq \frac{1}{k_n}[1 + \varrho_M(k_n x_n)] \leq \frac{1}{k_n}[\varrho_N(p(k_n x_n)) + \varrho_M(k_n x_n)] = \frac{1}{k_n}\langle p(k_n x_n), k_n x_n\rangle = 1.$$

Now, we estimate $\|x_n + y_n\|^o$. Since $M \in \nabla_2$, there exists $K > 2$ such that $N(2v) \leq KN(v)$ for all $v \geq p(u_1)$. So, by the convexity of N,

$$\begin{aligned}
N\Big(p\Big(\frac{k_nh_n}{k_n+h_n}\Big(\frac{1+\varepsilon}{k_n}+\frac{1}{h_n}\Big)u_n\Big)\Big) &= N\Big(p\Big(\Big(1+\frac{\varepsilon h_n}{k_n+h_n}\Big)u_n\Big)\Big)\\
&\le N(p((1+\varepsilon)u_n)) < N\Big(\Big(1+\frac{1}{n}\Big)p(u_n)\Big)\\
&\le \Big(1-\frac{1}{n}\Big)N(p(u_n))+\frac{1}{n}N(2p(u_n))\\
&< N(p(u_n))+\frac{K}{n}N(p(u_n)).
\end{aligned}$$

It follows that

$$\begin{aligned}
\varrho_N\Big(p\Big(\frac{k_nh_n}{k_n+h_n}(x_n+y_n)\Big)\Big) &= N\Big(p\Big(\frac{k_nh_n}{k_n+h_n}\Big(\frac{1+\varepsilon}{k_n}+\frac{1}{h_n}\Big)u_n\Big)\Big)\mu G_n + N(p(2a))\mu A\\
&< (1+K/n)[N(p(u_n))\mu G_n + N(p(a))\mu A] = 1+K/n.
\end{aligned}$$

Hence, if we define

$$v_n = \frac{1}{1+K/n}p\Big(\frac{k_nh_n}{k_n+h_n}(x_n+y_n)\Big),$$

then $\varrho_N(v_n)\le 1$ and thus,

$$\begin{aligned}
\|x_n+y_n\|^o \ge \langle v_n, x_n+y_n\rangle &\ge \frac{1}{1+K/n}\frac{k_n+h_n}{k_nh_n}[(1+\varepsilon)u_np(u_n)\mu G_n + ap(a)\mu A]\\
&= \frac{1}{1+K/n}\Big\{\Big(\frac{1+\varepsilon}{k_n}+\frac{1}{h_n}\Big)u_np(u_n)\mu G_n + \Big(\frac{1}{k_n}+\frac{1}{h_n}\Big)ap(a)\mu A\Big\}\\
&\ge \frac{1}{(1+K/n)(1+1/n)}\Big\{\frac{1+\varepsilon}{k_n}u_np((1+\varepsilon)u_n)\mu G_n + \frac{1}{k_n}ap(a)\mu A + 1\Big\}\\
&= \frac{2}{(1+K/n)(1+1/n)} \to 2.
\end{aligned}$$

Finally, we show that $\{x_n-y_n\}$ does not converge to zero weakly. Indeed, since by (1.5),

$$u_np(u_n)\mu G_n = q(p(u_n))p(u_n)\mu G_n \le N(2p(u_n))\mu G_n \le KN(p(u_n))\mu G_n = K/2$$

and similarly, $ap(a)\mu A\le K/2$, we derive

$$h_n < k_n \le (1+\varepsilon)(1+1/n)u_np(u_n)\mu G_n + ap(a)\mu A \le 2K+K = 3K.$$

Therefore,

$$\begin{aligned}
\Big\langle \frac{1}{a\mu A}\chi_A, y_n-x_n\Big\rangle = \frac{1}{h_n}-\frac{1}{k_n} &= \frac{1}{k_nh_n}[(1+\varepsilon)u_np((1+\varepsilon)u_n) - u_np(u_n)]\mu G_n\\
&\ge \frac{\varepsilon}{b^2}u_np(u_n)\mu G_n > \frac{\varepsilon}{b^2}N(p(u_n))\mu G_n = \frac{\varepsilon}{2b^2},
\end{aligned}$$

where $b=\sup_n\{k_n,h_n\}<\infty$ by Theorem 1.35. This shows that $\{y_n-x_n\}$ is not weakly convergent to zero. ■

THEOREM 2.43. *L_M is WUR iff it is reflexive and rotund.*

Proof. *Necessity.* Suppose that L_M is WUR. Then by Theorem 2.28, $M\in\Delta_2$ and M is strictly convex. Since a weakly sequentially complete WUR space is reflexive, Theorem 1.58 yields that L_M is reflexive.

Sufficiency. Let $x_n, y_n \in S(L_M)$ satisfy $\|x_n + y_n\| \to 2$. Then Lemma 2.26 implies $x_n - y_n \to 0$ in measure. For any $\varepsilon > 0$ and $v \in L_M^* = E_N$, by Theorem 1.27, there exists $\delta > 0$ such that $\mu E < \delta$ implies $\|v|_E\|_N^o < \varepsilon$. Take $G_n \in \Sigma$ with $\mu G_n < \delta$ and

$$|x_n(t) - y_n(t)| < \varepsilon[\|x_G\| \cdot \|v\|_N^o]^{-1} \qquad (t \in G \setminus G_n)$$

for all large n. Then the Hölder Inequality implies

$$|\langle v, x_n - y_n\rangle| \le \int\limits_{G\setminus G_n} |x_n(t) - y_n(t)||v(t)|\,dt + \|x_n - y_n\| \cdot \|v\chi_{G_n}\|_N^o < \varepsilon + 2\varepsilon = 3\varepsilon. \ \blacksquare$$

THEOREM 2.44. *l_M is WUR iff it is reflexive and either M is strictly convex on $[0, M^{-1}(1)]$ or M is uniformly convex on $[0, M^{-1}(1/2)]$.*

Proof. *Sufficiency.* Suppose that l_M is reflexive, i.e., $M \in \Delta_2 \cap \nabla_2$. If M is uniformly convex on $[0, M^{-1}(1/2)]$, then by Theorem 2.38, l_M is UR, and of course, WUR. Now, we assume that M is strictly convex on $[0, M^{-1}(1)]$, and that $x_n, y_n \in S(l_M)$ satisfy $\|x_n + y_n\| \to 2$. Since l_M is reflexive, $x_n - y_n \to 0$ weakly is equivalent to $x_n - y_n \to 0$ coordinatewise according to the proof of Theorem 1.62. Hence, we only need to show $x_n(i) - y_n(i) \to 0$ for all $i \in \mathbb{N}$ as $n \to \infty$. If this does not hold, then there exists $j \in \mathbb{N}$ such that $|x_n(j) - y_n(j)| \ge \varepsilon$ for some $\varepsilon > 0$ and infinitely many $n \in \mathbb{N}$. Thus, the strict convexity of M on $[0, M^{-1}(1)]$ implies

$$M\left(\frac{x_n(j) + y_n(j)}{2}\right) \le (1 - \delta)\frac{M(x_n(j)) + M(y_n(j))}{2}$$

for some $\delta > 0$. Therefore,

$$\begin{aligned} 1 \leftarrow \varrho_M\left(\frac{x_n + y_n}{2}\right) &= M\left(\frac{x_n(j) + y_n(j)}{2}\right) + \sum_{i\ne j} M\left(\frac{x_n(i) + y_n(i)}{2}\right) \\ &\le 1 - \delta\frac{M(x_n(j)) + M(y_n(j))}{2} \\ &\le 1 - \delta M\left(\frac{x_n(j) + y_n(j)}{2}\right) \le 1 - \delta M(\varepsilon/2) < 1, \end{aligned}$$

a contradiction.

Necessity. As in the proof of Theorem 2.43, we find that l_M is reflexive and that M is strictly convex on $[0, M^{-1}(1/2)]$. Hence, if the condition is not necessary, then M is affine on some interval $[a, b] \subset (M^{-1}(1/2), M^{-1}(1))$ and there exist $u_n, v_n \downarrow 0$ with $u_n > v_n$ and $u_n - v_n \ge \varepsilon u_n$ such that

$$M\left(\frac{u_n + v_n}{2}\right) > (1 - 1/n)\frac{M(u_n) + M(v_n)}{2} \qquad (n \in \mathbb{N}).$$

Since $u_n \downarrow 0$, we may assume the existence of an integer m_n such that

$$\min\{M(b) - M(a), 1 - M(b)\} > m_n M(u_n) \ge 2^{-1}\min\{M(b) - M(a), 1 - M(b)\}.$$

Choose $\alpha_n > 0$ such that

$$M(b) + m_n M(v_n) = M(\alpha_n) + m_n M(u_n).$$

Then pick $c_n > 0$ satisfying

$$M(b) + m_n M(v_n) + M(c_n) = M(\alpha_n) + m_n M(u_n) + M(c_n) = 1$$

and define

$$x_n = (b, c_n, \overbrace{v_n, \ldots, v_n}^{m_n}, 0, 0, \ldots), \qquad y_n = (\alpha_n, c_n, \overbrace{u_n, \ldots, u_n}^{m_n}, 0, 0, \ldots).$$

Then it is clear that $x_n, y_n \in S(l_M)$ $(n \in \mathbb{N})$. Observing that

$$M(b) - M(\alpha_n) = m_n M(u_n) - m_n M(v_n) \le m_n M(u_n) < M(b) - M(a),$$

we have $a < \alpha_n < b$. Hence,

$$\begin{aligned}\varrho_M\left(\frac{x_n + y_n}{2}\right) &= M\left(\frac{b + \alpha_n}{2}\right) + M(c_n) + m_n M\left(\frac{u_n + v_n}{2}\right)\\ &> \tfrac{1}{2}\{M(b) + M(\alpha_n) + 2M(c_n) + (1 - 1/n)m_n[M(u_n) + M(v_n)]\}\\ &> \tfrac{1}{2}(1 - 1/n)\{\varrho_M(x_n) + \varrho_M(y_n)\} = 1 - 1/n \to 1,\end{aligned}$$

i.e., $\|x_n + y_n\| \to 2$.

On the other hand, since $M \in \Delta_2$, we can find $\delta > 0$ such that $0 \le u \le M^{-1}(1)$ implies $M(\varepsilon u) \ge \delta M(u)$. Therefore,

$$\begin{aligned}M(b) - M(\alpha_n) &= m_n[M(u_n) - M(v_n)] \ge m_n M(u_n - v_n) \ge m_n M(\varepsilon u_n) \ge \delta m_n M(u_n)\\ &\ge \frac{\delta}{2}\min\{M(b) - M(a), 1 - M(b)\} > 0.\end{aligned}$$

This shows that $\{x_n - y_n\}$ does not converge to zero weakly. ■

Now, we consider W*UR Orlicz spaces.

LEMMA 2.45. (i) *If $\{x_n\}$ is a bounded sequence in L_M and it converges to zero in measure, then $x_n \to 0$ E_N-weakly.*

(ii) *If $\{x_n\}$ is a bounded sequence in l_M and it converges to zero coordinatewise, then $x_n \to 0$ h_N-weakly.*

Proof. We only prove (i). Suppose $\|x_n\| \le K$. For any $v \in E_N$ and $\varepsilon > 0$, choose $\delta > 0$ such that $E \in \Sigma$ and $\mu E < \delta$ imply $\|v|_E\|_N^o < \varepsilon$. Since $x_n \to 0$ in measure, we can find $G_n \in \Sigma$ with $\mu G_n < \delta$ and $|x_n(t)| < \varepsilon$ on $G \setminus G_n$ for all large n. Hence, for such n,

$$\begin{aligned}|\langle v, x_n\rangle| &\le \int_{G\setminus G_n} |x_n(t)v(t)|\,dt + \int_{G_n} |x_n(t)v(t)|\,dt\\ &\le \varepsilon\|\chi_G\| \cdot \|v\|_N^o + \|x_n\| \cdot \|v|_{G_n}\|_N^o \le \varepsilon\|\chi_G\| \cdot \|v\|_N^o + \varepsilon K.\end{aligned}$$

This shows that $\langle v, x_n\rangle \to 0$ since ε is arbitrary. ■

THEOREM 2.46. *L_M or l_M is W*UR iff it is rotund.*

Proof. We only deal with L_M. The necessity is trivial. Now, we prove the sufficiency. Let $x_n, y_n \in S(L_M)$ and $\|x_n + y_n\| \to 2$. Since $M \in \Delta_2$, we have $\varrho_M((x_n + y_n)/2) \to 1$. It follows from Lemma 2.26 that $x_n - y_n \to 0$ in measure. Therefore, $x_n - y_n \xrightarrow{w^*} 0$ by Lemma 2.45. ■

THEOREM 2.47. *L_M^o (l_M^o) is W*UR iff M is uniformly convex (on $[0, \pi_M(1)]$).*

Proof. We also consider L_M^o only.

Sufficiency. Let $x_n, y_n \in S(L_M^o)$ and $\|x_n + y_n\|^o \to 2$. Since the uniform convexity of M implies that $M \in \nabla_2$, we find that $\{k_n, h_n\}_n$ is bounded, where $k_n \in K(x_n)$ and

$h_n \in K(y_n)$. Hence, by Lemma 2.26, $k_n x_n - h_n y_n \to 0$ in measure. To prove $x_n - y_n \to 0$ E_N-weakly, it suffices to show $k_n - h_n \to 0$ in view of Lemma 2.45.

Indeed, for any $\varepsilon > 0$ and $n \in \mathbb{N}$, set

$$\begin{aligned} I_n &= \{t \in G : k_n|x_n(t)| < \varepsilon,\ h_n|y_n(t)| < \varepsilon\}, \\ J_n &= \{t \in G : |k_n x_n(t) - h_n y_n(t)| < \varepsilon \max(|k_n x_n(t)|, |h_n y_n(t)|)\}, \\ H_n &= G \setminus (I_n \cup J_n). \end{aligned}$$

Then by copying the proof of Theorem 2.33, we can show $|k_n - h_n| \le O(\varepsilon)$, i.e., $k_n - h_n \to 0$.

Necessity. Let $c > 0$ satisfy $N(p(c))\mu G > 1$ and choose $E, F \in \Sigma$ such that $E \subset F$ and $N(p(c))\mu F = 1$ and $N(p(c))\mu E = 1/2$. Since W*UR $\Rightarrow$ R, we find that M is strictly convex. Therefore, if M is not uniformly convex, then there exist $u_n \uparrow \infty$ and $G_n \subset G \setminus F$ such that

$$p((1+\varepsilon)u_n) < (1+1/n)p(u_n), \quad (1+\varepsilon)u_n p((1+\varepsilon)u_n)\mu G_n = 1/2 \quad (n \in \mathbb{N}).$$

Hence, there exist $E_n \in \Sigma$ such that $F \supset E_n \supset E$ and

$$N(p(u_n))\mu G_n + N(p(c))\mu E_n = 1 \qquad (n \in \mathbb{N}). \tag{2.25}$$

Define

$$k_n = cp(c)\mu E_n + (1+\varepsilon)u_n p((1+\varepsilon)u_n)\mu G_n, \qquad h_n = cp(c)\mu E_n + u_n p(u_n)\mu G_n,$$
$$x_n = \frac{1}{k_n}[c\chi_{E_n} + (1+\varepsilon)u_n\chi_{G_n}], \quad y_n = \frac{1}{h_n}[c\chi_{E_n} + u_n\chi_{G_n}], \quad v_n = p(c)\chi_{E_n} + p(u_n)\chi_{G_n}.$$

Then $h_n < k_n < cp(c)\mu F + 1/2$ and

$$k_n - h_n \ge \varepsilon u_n p(u_n)\mu G_n > \varepsilon(1+1/n)^{-1}u_n p((1+\varepsilon)u_n)\mu G_n > \frac{\varepsilon}{4(1+\varepsilon)}. \tag{2.26}$$

Furthermore, by Theorems 1.29 and 1.30 and (2.25), $\|y_n\|^o = \langle v_n, y_n\rangle = 1$ and

$$\begin{aligned} \|x_n\|^o &\le \frac{1}{k_n}[1 + \varrho_M(k_n x_n)] = \frac{1}{k_n}[\varrho_N(v_n) + M(c)\mu E_n + M((1+\varepsilon)u_n)\mu G_n] \\ &\le \frac{1}{k_n}[cp(c)\mu E_n + (1+\varepsilon)u_n p((1+\varepsilon)u_n)\mu G_n] = 1. \end{aligned}$$

Next, we estimate $\|x_n + y_n\|^o$. Observing that $\langle v_n, y_n\rangle = 1$ and that

$$\begin{aligned} \langle v_n, k_n x_n\rangle &= cp(c)\mu E_n + (1+\varepsilon)u_n p(u_n)\mu G_n \\ &\ge cp(c)\mu E_n + (1+1/n)^{-1}(1+\varepsilon)u_n p((1+\varepsilon)u_n)\mu G_n \ge (1+1/n)^{-1}k_n, \end{aligned}$$

we deduce that $\|x_n + y_n\|^o \ge \langle v_n, x_n + y_n\rangle \ge 1 + (1+1/n)^{-1} \to 2$. On the other hand, since $\langle \chi_E, x_n - y_n\rangle = (1/k_n - 1/h_n)c\mu E$, by (2.26), $\{x_n - y_n\}$ cannot converge to zero E_N-weakly. ■

2.7. Smoothness. Let X be a Banach space. $x \in X$ is called a *smooth point* if it has a unique supporting functional f_x. If every $x \ne 0$ is a smooth point, then X is called a *smooth* (S) space. In this case, the mapping $x \mapsto f_x$ from $X \setminus \{0\}$ to $S(X^*)$ is called the *supporting mapping*.

Moreover, if the supporting mapping is norm-weakly continuous, then X is called *very smooth* (VS). If the mapping is norm-norm continuous, then X is called *strongly smooth* (SS). X is *uniformly smooth* (US) provided that for any $\varepsilon > 0$, there exists $\delta > 0$ such that $x \in S(X)$ and $0 < \|y\| < \delta$ imply

$$(\|x+y\| + \|x-y\| - 2)/\|y\| < \varepsilon.$$

Let f be a continuous function defined on an open set O in X and $x \in O$. If for any $y \in X$, the limit

$$\partial f(x)(y) = \lim_{h\to 0} \frac{f(x+hy) - f(x)}{h}$$

exists, then x is called a *Gateaux differentiable point* of f. $x \in O$ is called a *Fréchet differentiable point* of f provided that for any $\varepsilon > 0$, there exists $\delta > 0$ such that $0 \le \|h\| < \delta$ implies

$$\left| \frac{f(x+hy) - f(x)}{h} - \partial f(x)(y) \right| < \varepsilon$$

for all $y \in B(X)$.

X is called a *Gateaux differentiable space* if the set of Gateaux differentiable points of every convex continuous function defined on a nonempty open convex subset of X is dense in that subset. Moreover, if the above set is a dense G_δ set in the relevant subset, then X is called a *weak Asplund space*. X is called an *Asplund space* if the set of Fréchet differentiable points of every convex continuous function defined on a nonempty open convex subset of X is a dense G_δ set in that subset.

LEMMA 2.48. *Let $x \in L_M$, and $\theta(x) \neq 0$. Then there exist two different singular functionals $\varphi_i \in S(L_M^*)$ such that $\varphi_i(x) = \theta(x), i = 1, 2$.*

Proof. Define $G(n) = \{t \in G : n-1 \le |x(t)| < n\}$ and for each $n \in \mathbb{N}$, decompose $G(n)$ into $G_1(n)$ and $G_2(n)$ such that $\mu G_i(n) = 2^{-1}\mu G(n)$ $(i = 1, 2)$. Then $x_i = \sum_{n=1}^{\infty} x\chi_{G_i(n)}$ satisfy $\theta(x_i) = \theta(x)$ $(i = 1, 2)$. Indeed, let $\theta = \theta(x)$. Then for any $\varepsilon \in (0, \theta/2)$, there exists $m \in \mathbb{N}$ such that

$$\frac{m-1}{m} \cdot \frac{1}{\theta - 2\varepsilon} > \frac{1}{\theta - \varepsilon}.$$

Since

$$t, s \in G(n) \Rightarrow |x(t)| < n \le \frac{n}{n-1}|x(s)|,$$

for all $n \ge m$ and all $t \in G_i(n)$,

$$\frac{|x_i(t)|}{\theta - 2\varepsilon} = \frac{|x(t)|}{\theta - 2\varepsilon} \ge \frac{n-1}{\theta - 2\varepsilon} \ge \frac{n-1}{n} \cdot \frac{|x(t)|}{\theta - 2\varepsilon} > \frac{|x(t)|}{\theta - \varepsilon}.$$

It follows from the definition of θ that

$$\begin{aligned}\varrho_M\left(\frac{x_i}{\theta - 2\varepsilon}\right) &\ge \sum_{n\ge m} \int_{G_i(n)} M\left(\frac{x(t)}{\theta - 2\varepsilon}\right) dt \ge \sum_{n\ge m} \int_{G_i(n)} M\left(\frac{n-1}{\theta - 2\varepsilon}\right) dt \\ &= \frac{1}{2} \sum_{n\ge m} \int_{G(n)} M\left(\frac{n-1}{\theta - 2\varepsilon}\right) dt \ge \frac{1}{2} \sum_{n\ge m} \int_{G(n)} M\left(\frac{x(t)}{\theta - \varepsilon}\right) dt = \infty.\end{aligned}$$

This implies $\theta(x_i) = \theta(x)$ $(i = 1, 2)$. Hence, by the Hahn–Banach Theorem, there exist singular functionals φ_i $(i = 1, 2)$ such that $\|\varphi_i\| = 1$ and $\varphi_i(x_i) = d(x_i, E_M) = \theta(x_i)$ $(i = 1, 2)$. Thus, by Lemma 1.49 and Theorem 1.54, $\varphi_i(x) = \theta(x)$ and $\varphi_i(x_j) = 0$ $(i, j = 1, 2, i \neq j)$. ∎

THEOREM 2.49. *$x \in L_M$, $x \neq 0$ is a smooth point iff* (a) $\theta(x/\|x\|) < 1$ *and* (b) $G(x) = \{t \in G : p_-(|x(t)|/\|x\|) < p(|x(t)|/\|x\|)\}$ *is a null set. In this case, the supporting functional of x is*

$$\begin{aligned} v &= [p(|x|/\|x\|)/\|p(|x|/\|x\|)\|_N^o] \operatorname{sign} x \\ &= \{p(|x|/\|x\|)/[1 + \varrho_N(p(|x|/\|x\|))]\} \operatorname{sign} x. \end{aligned}$$

Proof. By Lemma 2.48, condition (a) is necessary. The necessity of (b) follows from Theorem 1.78. To show the sufficiency, first we observe that Theorem 1.76 (ii) and Lemma 1.49 imply that all supporting functionals of x are contained in L_N^o. Then the conclusion follows from Theorem 1.78 and the fact that

$$\|p(|x|/\|x\|)\|_N^o = \langle x/\|x\|, \|p(|x|/\|x\|)\|_N^o v\rangle = \varrho_M(x/\|x\|) + \varrho_N(p(|x|/\|x\|)). \ ∎$$

We say that M is *smooth* if its right derivative p is continuous.

THEOREM 2.50. (i) *E_M is a smooth space iff M is smooth.*
(ii) *L_M is a smooth space iff $M \in \Delta_2$ and M is smooth.*

Proof. For any $x \neq 0$ in E_M, we have $\theta(x) = d(x, E_M) = 0$. If M is smooth, then $G(x) = \emptyset$, where $G(x)$ is defined as in Theorem 2.49, and so, by Theorem 2.40, x is a smooth point of E_M.

If M is not smooth at α, then we can select disjoint $E, F \in \Sigma$ with $\mu E > 0$ and a constant β such that $M(\alpha)\mu E + M(\beta)\mu F = 1$. Set $x = \alpha\chi_E + \beta\chi_F$. Then $\varrho_M(x) = 1$, $x \in E_M$ but $\mu G(x) \geq \mu E > 0$. By Theorem 2.49, x is not a smooth point of E_M.

If $M \notin \Delta_2$, then by Example 1.19, there exists $x \in S(L_M)$ with $\varrho_M(x) < 1$. Clearly, $\theta(x) = 1$, whence x is not a smooth point of L_M by Theorem 2.49. ∎

THEOREM 2.51. *Let $x \neq 0$ in L_M^o and $k = \min\{K(x)\}$. Then x is a smooth point iff* (a) $\varrho_N(p_-(k|x|)) = 1$ *or* (b) $\theta(kx) < 1$ *and* $\varrho_N(p(k|x|)) = 1$. *Moreover, in case* (a), *the supporting functional of x is $p_-(k|x|) \operatorname{sign} x$, while in case* (b), *it is $p(k|x|) \operatorname{sign} x$.*

Proof. $\Leftarrow$ Let $f = v + \varphi$ be a supporting functional of x, where $v \in L_N$ and $\varphi \in F$. Then Theorem 1.77 shows that $p_-(k|x|) \leq |v| \leq p(k|x|)$. Hence, if (a) holds, then by Theorem 1.77 (i), we deduce that $v = p_-(k|x|) \operatorname{sign} x$ and $\varphi = 0$. If (b) holds, then by Lemma 1.49 and Theorem 1.77 (ii), $\varphi = 0$ and thus, $v = p(k|x|) \operatorname{sign} x$ since $\varrho_N(v) = 1 = \varrho_N(p(k|x|))$ and $|v| \leq p(k|x|)$.

$\Rightarrow$ Suppose $\varrho_N(p_-(k|x|)) \neq 1$. By Theorems 1.77 and 1.71, we have $\varrho_N(p_-(k|x|)) = \alpha < 1$. If $\theta(kx) < 1$, then Theorem 1.77 and Lemma 1.49 imply that all supporting functionals of x are in L_N. Therefore, if $\varrho_N(p(k|x|)) \neq 1$, then we must have $\varrho_N(p(k|x|)) > 1$. This implies that the set

$$\{v \operatorname{sign} x : p_-(k|x|) \leq |v| \leq p(k|x|),\ \varrho_N(v) = 1\}$$

contains infinitely many elements, and by Theorem 1.80, every element in this set is a supporting functional of x, which shows that x is not a smooth point.

Now, we assume $\theta(kx) = 1$ (note that $\varrho_M(kx) = k\|x\| - 1 < \infty$ implies $\theta(kx) \le 1$). By Lemma 2.48, there exist $\varphi_1, \varphi_2 \in F$ such that $\varphi_1 \ne \varphi_2$ and $\|\varphi_1\| = \|\varphi_2\| = 1$ and $\varphi_i(kx) = \theta(kx) = 1$ $(i = 1, 2)$. Define $f_i = p_-(k|x|)\operatorname{sign} x + (1-\alpha)\varphi_i$ $(i = 1, 2)$. Then $f_1 \ne f_2$ and by Theorem 1.51, $\|f_1\| = \|f_2\| = 1$ and thus, Theorem 1.77 implies that f_1 and f_2 are supporting functionals of x, which also shows that x is not a smooth point. ∎

THEOREM 2.52. (i) *E_M^o is smooth iff M is smooth.*

(ii) *L_M^o is smooth iff $M \in \Delta_2$ and M is smooth.*

Proof. Suppose that M is not smooth at $a > 0$. Then there exist v, w such that $p_-(a) < v < w < p(a)$. Select $b \ge 0$ and disjoint nonnull sets $E, F \in \Sigma$ satisfying

$$N\left(\frac{v+w}{2}\right)\mu E + N(p(b))\mu E = 1$$

and define $x = a\chi_E + b\chi_F$. Then

$$\varrho_N(p(x)) = N(p(a))\mu E + N(p(b))\mu E > N(w)\mu E + N(p(b))\mu F > 1,$$

and for all positive $l < 1$,

$$\varrho_N(p(lx)) < N(v)\mu E + N(p(b))\mu F < 1.$$

This means that $K(x) = \{1\}$ or equivalently, $K(x/\|x\|^o) = \|x\|^o$. Moreover, since $\varrho_N(p_-(x)) < N(v)\mu E + N(p(b))\mu F < 1$, by Theorem 2.51, x is not a smooth point of E_M.

If M is smooth, then for any $x \ne 0$ in E_M and $k \in K(x)$, $\theta(x) = 0 < 1$. Observing that $R(k) = \varrho_N(p(k|x|))$ is a continuous function on R and $R(0) = 0$, $R(\infty) = \infty$, we can find $k' > 0$ such that $R(k') = 1$. It follows from the continuity of p that $\varrho_N(p(k|x|)) = 1$ for all $k \in K(x)$. Hence, by Theorem 2.51, x is a smooth point of E_M^o.

Finally, we assume that $M \notin \Delta_2$, i.e., there exist $u_n \uparrow \infty$ such that

$$M((1+1/n)u_n) > n2^{n+1}M(u_n) \qquad (n \in \mathbb{N}).$$

Observing that

$$M(u) \ge \int_{(1-1/n)u}^{u} p(t)\,dt \ge n^{-1}up((1-1/n)u) \qquad (u \ge 0),$$

we have

$$(1+1/n)u_np((1+1/n)u_n) > M((1+1/n)u_n) > n2^{n+1}M(u_n) > 2^{n+1}u_np((1-1/n)u_n).$$

Therefore,

$$p((1+1/n)u_n) > 2^np((1-1/n)u_n).$$

Without loss of generality, we assume $2^{-1}u_1p(u_1/2)\mu G > 1$. Then there exist disjoint $\{G_n\}$ in Σ such that

$$(1-1/n)u_np((1-1/n)u_n)\mu G_n = 2^{-n}.$$

Define $x = \sum_{n=2}^{\infty}(1-1/n)u_n\chi_{G_n}$. Then

$$\varrho_M(x) + \varrho_N(p(x)) = \int_G x(t)p(x(t))\,dt = \sum_{n=2}^{\infty}(1-1/n)u_np((1-1/n)u_n)\mu G_n < 1.$$

For any $l > 1$, let $m > 2$ satisfy $(1 - 1/m)l > 1 + 1/n$. Then

$$\varrho_M(x) + \varrho_N(p(lx)) \geq \int_G x(t)p(lx(t))\,dt \geq \sum_{n>m} (1 - 1/n)u_n p((1 + 1/n)u_n)\mu G_n$$
$$\geq \sum_{n>m} 2^n(1 - 1/n)u_n p((1 - 1/n)u_n)\mu G_n = \infty.$$

This shows $x \in L_M$ and $K(x) = \{1\}$. Recall that $\varrho_N(p(x)) < 1$, by Theorem 2.51, x is not a smooth point of L_M^o. ■

THEOREM 2.53. *Let $x(\neq 0) \in l_M$.*

(i) *If x has only one nonzero coordinate, then it is a smooth point of l_M.*

(ii) *If x has more than one nonzero coordinate, then it is a smooth point in l_M iff $\theta(x/\|x\|) < 1$ and M is smooth at each point $|x(i)|/\|x\|$ $(i \in \mathbb{N})$. Furthermore, in this case, the supporting functional of x is*

$$v = \frac{p(|x|/\|x\|)\operatorname{sign} x}{1 + \varrho_N(p(|x|/\|x\|))}.$$

Proof. (ii) can be shown just as Theorem 2.49, hence, we only prove (i). Let $x(i) \neq 0$ and $x(j) = 0$ for all $j \neq i$. For any supporting functional v of x, since $x \in h_M$, we find $v \in l_N$. Clearly, $v(i)x(i) > 0$ and $v(j) = 0$ for all $j \neq i$. Therefore, by Example 1.22,

$$v(i) = \frac{1}{M^{-1}(1)} \operatorname{sign} x(i). \ ■$$

THEOREM 2.54. (i) *h_M is smooth iff M is smooth on $(0, M^{-1}(1))$.*

(ii) *l_M is smooth iff $M \in \Delta_2$ and M is smooth on $(0, M^{-1}(1))$.*

Proof. Let $x(\neq 0) \in h_M$. If x has only one nonzero coordinate, then it is a smooth point of l_M by Theorem 2.53. Otherwise, $\varrho_M(x/\|x\|) = 1$ implies $M(x(i)/\|x\|) < 1$ for all $i \in \mathbb{N}$. It follows from the smoothness of M on $(0, M^{-1}(1))$ that p is continuous at $|x(i)|/\|x\|$. Hence, from $\theta(x) = 0$ we deduce that x is a smooth point of h_M.

Conversely, if $M \notin \Delta_2$, then we can construct $x \in S(l_M)$ with $\varrho_M(x) < 1$. Hence, $\theta(x) = 1$. By Theorem 2.53, x is not a smooth point of l_M. If M is not smooth at $a \in (0, M^{-1}(1))$, then $M(a) < 1$ and so there exists $b > 0$ satisfying $M(b) + M(a) = 1$. Let $x = (a, b, 0, 0, \ldots)$. Then by Theorem 2.53, x is not a smooth point of h_M. ■

THEOREM 2.55. *Let $x(\neq 0) \in l_M^o$ and $k = \min\{K(k)\}$. Then x is a smooth point iff* (a) *$\varrho_N(p_-(k|x|)) = 1$ or* (b) *$\theta(kx) < 1$ but either $\varrho_N(p(k|x|)) = 1$ or $J = \{j \in \mathbb{N} : p_-(k|x(j)|) < p(k|x(j)|)\}$ contains at most a single point.*

Proof. As in the proof of Theorem 2.51, if $\varrho_N(p_-(k|x|)) = 1$, then x has the unique supporting functional

$$v = p_-(k|x|)\operatorname{sign} x$$

and if $\theta(kx) < 1$ and $\varrho_N(p(k|x|)) = 1$, or $J = \emptyset$, then x has the unique supporting functional

$$v = p(k|x|)\operatorname{sign} x.$$

Now, we assume $J = \{i\}$ and $\theta(kx) < 1$. Let v be a supporting functional of x. Then similarly, $\theta(kx) < 1$ implies $v \in l_N$ and so $\varrho_N(v) = 1$. Clearly, for all $j \neq i$, we have

$v(j) = p(k|x(j)|)\operatorname{sign} x(j)$, and thus, $\varrho_N(v) = 1$ implies

$$v(i) = N^{-1}\Big(1 - \sum_{j\neq i} N(p(k|x(j)|))\Big)\operatorname{sign} x(i).$$

Hence, v is uniquely determined.

The necessity is verified analogously to Theorem 2.51. ∎

THEOREM 2.56. (i) h_M^o *is smooth iff* M *is smooth on* $(0, \pi_M(1/2))$ *and* $p_-(\pi_M(1/2)) = N^{-1}(1/2)$.

(ii) l_M^o *is smooth iff* $M \in \Delta_2$ *and* M *is smooth on* $(0, \pi_M(1/2))$ *and* $p_-(\pi_M(1/2)) = N^-(1/2)$.

Proof. If $M \notin \Delta_2$, then similarly to the proof of Theorem 2.49, we can show that l_M^o is not smooth. So, we only need to prove (i).

Sufficiency. Assume that M is smooth on $(0, \pi_M(1/2))$ and $p_-(\pi_M(1/2)) = N^{-1}(1/2)$. Let $x(\neq 0) \in h_M^o$ and $k = \min\{K(x)\}$. Then $\theta(kx) = 0 < 1$. Since p_- is a left-continuous function, by the definition of k, we have $\varrho_N(p_-(k|x|)) \le 1$. If $\varrho_N(p_-(k|x|)) = 1$, then in virtue of Theorem 2.55, x is a smooth point. Now, we consider the case $\varrho_N(p_-(k|x|)) < 1$. In this case, there is at most one index $j \in \mathbb{N}$ such that $p_-(k|x(j)|) \ge N^{-1}(1/2)$. Hence by the second condition, for all $i \neq j$, $k|x(i)| < \pi_M(1/2)$ since p_- is nondecreasing. It follows from the first condition that $p_-(k|x(i)|) = p(k|x(i)|)$ for all $i \neq j$. Hence by Theorem 2.55, in this case x is also a smooth point. Since $x \in h_M$ is arbitrary, we conclude that h_M is smooth.

Necessity. Assume first that M is not smooth at $\alpha \in (0, \pi_M(1/2))$. Set

$$\beta = \inf\{b \ge 0 : N(p(\alpha)) + N(p_-(\alpha)) + N(p(b)) \ge 1\}$$

and define $x = (\alpha, \alpha, \beta, 0, 0, \ldots)$. Then by the right continuity of p, the left continuity of p_-, the choice of β and the definition of $\pi_M(\cdot)$, we have $\varrho_N(p(x)) > 1$ and $\varrho_N(p_-(x)) < 1$. This shows that $K(x) = \{1\}$, and so, by Theorem 2.55, x is not a smooth point of h_M^o.

Next we assume $p_-(\pi_M(1/2)) < N^{-1}(1/2)$. By the definition of $\pi_M(\cdot)$, p is not continuous at $\delta := \pi_M(1/2)$. Pick $s > 0$ satisfying $2N(p_-(\delta)) + N(p(s)) < 1$ and define $x = (\delta, \delta, s, 0, 0, \ldots)$. Then clearly, $\varrho_N(p_-(x)) < 1$ and by the definition of $\pi_M(1/2)$,

$$\varrho_N(p(x)) = 2N(p(\delta)) + N(p(s)) \ge 1 + N(p(s)) > 1.$$

This shows $K(x) = 1$. Hence, by Theorem 2.55, x is not a smooth point. This finishes the proof. ∎

THEOREM 2.57. *Let* $X = L_M, L_M^o, l_M$, *or* l_M^o. *Then the following are equivalent*:

(i) X *is* SS.
(ii) X *is* VS.
(iii) X *is smooth and reflexive.*

Proof. (i)⇒(ii) is a general implication.

(ii)⇒(iii). Clearly, X is smooth. Since for any Banach space Y, Y is reflexive if Y^* is VS, we deduce that X is reflexive since X is a dual space and $M \in \Delta_2$.

(iii)⇒(i). Since (iii) implies that X^* is LUR, by the general implication that LUR of $Y^* \Rightarrow$ SS of Y, we conclude that X is SS. ∎

REMARK. Since US of $Y \Leftrightarrow$ UR of Y^*, one can easily find a criterion for Orlicz spaces to be US. Moreover, by Theorems 1.18, 2.37 and 2.38, any reflexive Orlicz space has uniformly rotund and uniformly smooth Orlicz norm and Luxemburg norm.

THEOREM 2.58. (i) *E_M is a weak Asplund space.*
(ii) *E_M is an Asplund space iff $M \in \nabla_2$.*
(iii) *L_M is an Asplund space iff it is reflexive.*

Proof. Since a separable Banach space is a weak Asplund space, (i) follows.

(ii) holds because a separable Banach space is an Asplund space iff its dual is separable.

(iii) is true according to (ii) and Theorem 2.59 below. ■

S. Chen & X. Yu [51] shows that (i) the set of smooth points of L_M is a dense G_δ set in L_M, and (ii) the set of smooth points of L_M is an open set in L_M iff N is smooth. But this does not mean that L_M is always a weak Asplund space. In fact, we have the following.

THEOREM 2.59. *The following are equivalent*:

(i) *$M \notin \Delta_2$.*
(ii) *L_M is not a Gateaux differentiable space.*
(iii) *L_M is not a weak Asplund space.*
(iv) *There exists a continuous, convex and nowhere differentiable functional on L_M.*

Proof. We complete the proof by constructing a nowhere differentiable continuous convex function on L_M if $M \notin \Delta_2$. In fact, $\theta(\cdot)$ is a candidate. Indeed, for any $x \in L_M$, let $G^x(n) = \{t \in G : |x(t)| > n\}$ and $x|n = x|_{G^x(n)}$. Then by Theorem 1.43, $\theta(x) = \lim_n \|x|n\|$. Therefore, $\theta(\cdot)$ is clearly a convex function. Now, we show that it is continuous. Let $x^k \to x$ as $k \to \infty$. Then

$$|\theta(x^k) - \theta(x)| = \lim_n |\|x^k|n\| - \|x|n\|| \le \lim_n \|(x^k - x)|n\| \le \|x^k - x\| \to 0.$$

Finally, we investigate its differentiability. Obviously, if $\theta(x) = 0$, then for any $y \in L_M$, $\theta(x + y) = \theta(y)$. Hence,

$$\frac{\theta(x + ty) - \theta(x)}{t} = \frac{|t|}{t}\theta(y).$$

This shows that θ is not differentiable at x since for all $y \in L_M \setminus E_M$, the last term does not converge as $t \to 0$.

Suppose $\theta(x) > 0$. Then by the proof of Lemma 2.48, we can find disjoint $E, F \in \Sigma$ such that $E \cup F = G$ and that $\theta(x|_E) = \theta(x|_F) = \theta(x)$. Let $y = x|_E - x|_F$. Then $-1 < t < 0$ and $0 < t < 1$ imply, respectively,

$$\lim_n \|(x + ty)|n\| = (1 \mp t)\theta(x).$$

Hence, in the first case,

$$\frac{\theta(x + ty) - \theta(x)}{t} = -\theta(x),$$

and in the second case,

$$\frac{\theta(x+ty)-\theta(x)}{t}=\theta(x).$$

This also shows that θ is not differentiable at x. ∎

REMARK. The last two theorems can be easily translated into Orlicz sequence spaces.

To finish this section, we investigate the exposed points of Orlicz spaces. Let X be a Banach space and K a subset of X. Then $x \in K$ is called an *exposed point* of K if there exists some $f \in X^*$ such that $f(x) > f(y)$ for all $y \in K \setminus \{x\}$. Moreover, if $x_n \in K$ and $f(x_n - x) \to 0$ imply $\|x_n - x\| \to 0$ $(n \to \infty)$, then x is called a *strongly exposed point* of K.

THEOREM 2.60. *$x \in S(L_M)$ is an exposed point of $B(L_M)$ iff*

(i) *$\varrho_M(x) = 1$ and $\mu\{t \in G : x(t) \notin S_M\} = 0$,*

(ii) *$p_-(|x|) \in L_N$ and*

(iii) *$\mu G(a)\mu G(b) = 0$ for all SAIs $[a,d]$ and $[c,b]$ of M such that p is continuous at a, b, where $G(\alpha) = \{t \in G : |x(t)| = \alpha\}$.*

Proof. $\Rightarrow$ Since every exposed point is an extreme point, (i) follows.

If (ii) is not true, then by Theorem 1.76 and Corollary 1.79, x has only singular supporting functionals. Since for any $\varphi \in F$ with $\varphi(x) = \|\varphi\| = 1$, $\varphi(x|_{G_n}) = \varphi(x) = 1$ for all $n \in \mathbb{N}$, where $G_n = \{t \in G : |x(t)| \geq n\}$, we find that x is not an exposed point of $B(L_M)$.

Suppose that (iii) is false, i.e., M has two SAIs $[a,d]$ and $[c,b]$ such that $\mu G(a) > 0$, $\mu G(b) > 0$ and p is continuous at a and b. Without loss of generality, we may assume $x(t) \geq 0$ on G. Pick $\alpha \in (a,d), \beta \in (c,b)$ and disjoint E in $G(a)$, F in $G(b)$ such that

$$M(\alpha)\mu E + M(\beta)\mu F = M(a)\mu E + M(b)\mu F > 0$$

and define

$$y = \alpha\chi_E + \beta\chi_F + x|_{G\setminus(E\cup F)}.$$

Then it is obvious that $\varrho_M(y) = \varrho_M(x) = 1$ and $y \neq x$. Moreover, by Theorems 1.76 and 1.78, it is easy to check that for each supporting functional f of x, $f(x) = f(y) = 1$ since p is continuous at a, b.

$\Leftarrow$ Suppose that x satisfies (i)–(iii). Without loss of generality, we assume $x(t) \geq 0$ on G and $\mu G(b) = 0$ for each SAI $[a,b]$ of M such that p is continuous at b. Let $\{[a_n, b_n]\}$ be all SAIs of M such that $\mu\{t \in G : x(t) = b_n\} > 0$ and that p is not continuous at b_n. Since by (ii), $p_-(x) \in L_N$, we can find, for each $n, c_n \in (p_-(b_n), p(b_n))$ such that $w \in L_N$, where

$$w(t) = \begin{cases} c_n, & x(t) = b_n, \\ p_-(x(t)), & \text{otherwise.} \end{cases}$$

Clearly, by Theorem 1.78, $f = w/\|w\|_N^o$ is a supporting functional of x. Let $y \in S(L_M)$ satisfy $\langle f, y\rangle = 1$. We complete the proof by showing $y = x$. First, from Theorems 1.76 and 1.78, we deduce that $\varrho_M(y) = 1$ and $p_-(y) \leq w \leq p(y)$. Hence, $y(t) = x(t)$ μ-a.e. for all $t \in G$ such that $x(t) = b_n$ or $x(t)$ does not belong to any SAI of M. Therefore, (i) and (iii) imply that $0 \leq x(t) \leq y(t)$ μ-a.e. on G. Consequently, $\varrho_M(x) = \varrho_M(y)$ implies that $y(t) = x(t)$ μ-a.e. on G. ∎

The reader may verify the following theorems.

THEOREM 2.61. *$x \in S(L_M^o)$ is an exposed point of $B(L_M^o)$ iff*

(i) *$K(x) = \{k\}$ and $\mu\{t \in G : kx(t) \in R \setminus S_M\} = 0$,*

(ii) *for any extreme point α of any SAI of M, if p is continuous at α, then $\mu\{t \in G : kx(t) = \alpha\} = 0$,*

(iii) *if $\varrho_N(p_-(k|x|)) = 1$, then $\mu\{t \in G : k|x(t)| = b\} = 0$ for any SAI $[a, b]$ of M, and*

(iv) *if $\theta(kx) < 1$ and $\varrho_N(p(k|x|)) = 1$, then $\mu\{t \in G : k|x(t)| = a\} = 0$ for any SAI $[a, b]$ of M.*

THEOREM 2.62. *$x = (x(i)) \in S(l_M)$ is an exposed point of $B(l_M)$ iff*

(i) *$\varrho_M(x) = 1$ and $\{i \in \mathbb{N} : x(i) \in R \setminus S_M\}$ contains no more than one element,*

(ii) *$p_-(|x|) \in l_N$,*

(iii) *if $\{i \in \mathbb{N} : x(i) \in R \setminus S_M\}$ is a singleton, then for any $i \in \mathbb{N}$ such that $x(i)$ is an extreme point of some SAI of M, p is continuous at $|x(i)|$, and*

(iv) *if $\{i \in \mathbb{N} : x(i) \in R \setminus S_M\} = \emptyset$, then either $\{i \in N : |x(i)| = a\} = \emptyset$ or $\{i \in \mathbb{N} : |x(i)| = b\} = \emptyset$ for any SAIs $[a, d]$ and $[c, b]$ of M such that p is continuous at a and b.*

THEOREM 2.63. *$x = (x(i)) \in S(l_M^o)$ is an exposed point of $B(l_M^o)$ iff $\{i \in \mathbb{N} : x(i) \neq 0\}$ is a singleton or*

(i) *$K(x) = \{k\}$ and $kx(i) \in S_M$ for all $i \in \mathbb{N}$,*

(ii) *if $kx(i)$ is an extreme point of a SAI of M, then p is discontinuous at $k|x(i)|$,*

(iii) *if $k|x(i)|$ is the right extreme point of a SAI of M for some $i \in \mathbb{N}$, then $\varrho_N(p_-(k|x|)) < 1$, and*

(iv) *if $k|x(i)|$ is the left extreme point of a SAI of M, then either $\theta(kx) = 1$ or $\varrho_N(p(k|x|)) > 1$.*

THEOREM 2.64. *If $M \notin \Delta_2$, then $B(L_M), B(L_M^o), B(l_M)$ and $B(l_M^o)$ have no strongly exposed point. If $M \in \Delta_2$, then*

(I) *$x \in S(L_M)$ is a strongly exposed point of $B(L_M)$ iff*
  (1) *$\mu\{t \in G : |x(t)| \in R \setminus S_M\} = 0$, and*
  (2) *either $\mu\{t \in G : |x(t)| = b\} = 0$ for every SAI $[a, b]$ of M or $\mu\{t \in G : |x(t)| = c\} = 0$ for every SAI $[c, d]$ of M and $\theta_N(p_-(x)) < 1$, where $\theta_N(v) = \inf\{k > 0 : \varrho_N(v/k) < \infty\}$.*

(II) *$x \in S(L_M^o)$ is a strongly exposed point of $B(L_M^o)$ iff for every $k \in K(x)$ and every SAI $[a, b]$ of M,*
  (1) *$\mu\{t \in G : |kx(t)| \in (a, b)\} = 0$,*
  (2) *$\mu\{t \in G : |kx(t)| = e\} = 0$ for every extreme point e of $[a, b]$ on which p is continuous,*
  (3) *x has a supporting functional $v \in L_N$ with $\theta_N(v) < 1$,*
  (4) *$\varrho_N(p_-(x)) = 1$ implies $\mu\{t \in G : |kx(t)| = b\} = 0$, and*
  (5) *$\varrho_N(p(x)) = 1$ implies $\mu\{t \in G : |kx(t)| = a\} = 0$.*

(III) *$x = (x(i)) \in S(l_M)$ is a strongly exposed point of $B(l_M)$ iff*
(1) *$I = \{i \in \mathbb{N} : x(i) \in R \setminus S_M\}$ contains at most one element,*
(2) *if I contains one element, then $\theta_N(p_-(x)) < 1$ and for any $i \in \mathbb{N}\setminus I$, $x(i) \neq e$ for every extreme point e of every SAI of M on which p is continuous, and*
(3) *if $I = \emptyset$, then either $|x(i)| \neq b$ for any $i \in \mathbb{N}$ and any SAI $[a, b]$ of M when p is continuous at b, or $\theta_N(p_-(x)) < 1$ and $|x(i)| \neq c$ for any $i \in \mathbb{N}$ and any SAI $[c, d]$ of M when p is continuous at c.*

(IV) *$x = (x(i)) \in S(l_M^o)$ is a strongly exposed point of $B(l_M^o)$ iff either $\{i \in \mathbb{N} : x(i) \neq 0\}$ is a singleton or, for every $k \in K(x)$ and every SAI $[a, b]$ of M,*
(1) *$\{i \in \mathbb{N} : |kx(t)| \in (a, b))\} = \emptyset$,*
(2) *$\{i \in \mathbb{N} : |kx(t)| = e\} = \emptyset$ for every extreme point e of any SAI $[a, b]$ of M on which p is continuous,*
(3) *x has a supporting functional $v \in L_N$ with $\theta_N(v) < 1$,*
(4) *$\varrho_N(p_-(x)) = 1$ implies $\{i \in \mathbb{N} : |kx(i)| = b\} = \emptyset$, and*
(5) *$\varrho_N(p(x)) = 1$ implies $\{i \in \mathbb{N} : |kx(i)| = a\} = \emptyset$.*

Notes and remarks. The relations between rotundities and smoothness for Banach spaces are shown in Figures 2.1 and 2.2.

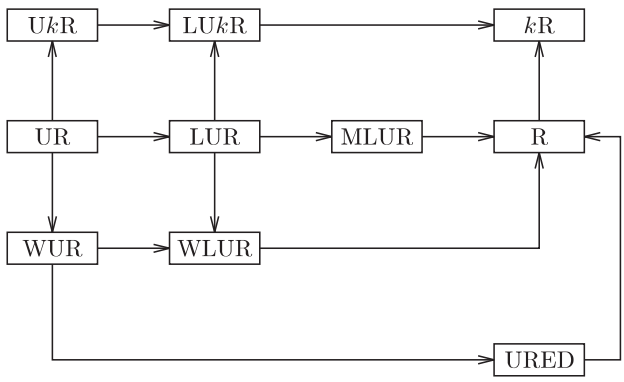

Fig. 2.1

The main results in this chapter are summarized in Table 2.1, where UC = uniformly convex, SC = strictly convex, S = smooth,

$$\pi_M(\alpha) = \inf\{s > 0 : N(p(s)) \geq \alpha\};$$

(∗) for any $u', \varepsilon, \varepsilon' > 0$, there exist $\gamma, D > 0$ such that for any $u > u'$,

$$p((1+\varepsilon)u) \leq (1+\gamma)p(u) \Rightarrow p(u) \leq Dp(\varepsilon' u);$$

(∗∗) for any $u', \varepsilon, \varepsilon' > 0$, there exist $\gamma, D > 0$ such that for any $u \in (0, u')$,

$$p((1+\varepsilon)u) \leq (1+\gamma)p(u) \Rightarrow p(u) \leq Dp(\varepsilon' u).$$

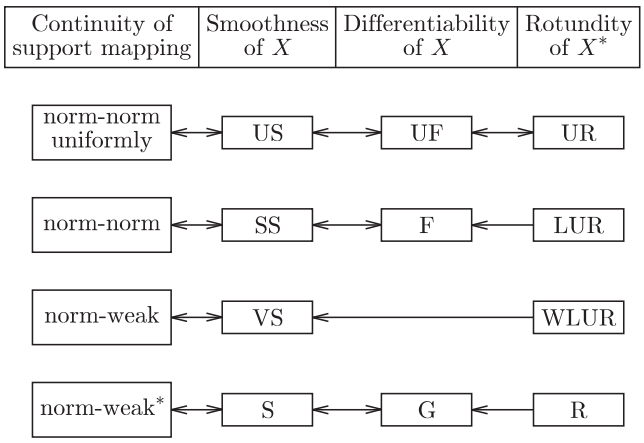

Fig. 2.2

Table 2.1

M	L_M	L_M^o	l_M	l_M^o
UkR	Δ_2 UC	Δ_2 UC	Δ_2 UC$[0, M^{-1}(1/(k+1))]$	Δ_2 UC$[0, \pi_M(1)]$
WUR	Δ_2, ∇_2 SC	as above	Δ_2, ∇_2 UC$[0, M^{-1}(1/2)]$ or SC$[0, M^{-1}(1)]$	as above
LUkR	Δ_2 SC	Δ_2, ∇_2 SC	Δ_2, SC$[0, M^{-1}(1/(k+1))]$, ∇_2 or SC$[M^{-1}(1/(k+1)), M^{-1}(1/k)]$	Δ_2, ∇_2 SC$[0, \pi_M(1/k)]$
WLUR	as above	as above	Δ_2, SC$[0, M^{-1}(1/2)]$ ∇_2 or SC$[M^{-1}(1/2), M^{-1}(1)]$	Δ_2, ∇_2 SC$[0, \pi_M(1)]$
MLUR	as above	Δ_2 SC	Δ_2 SC$[0, M^{-1}(1/2)]$	Δ_2 SC$[0, \pi_M(1)]$
R	as above	SC	as above	SC$[0, \pi_M(1)]$
URED	as above	$(*)$ SC	as above	$(**)$ SC$[0, \pi_M(1)]$
KR	as above	SC	Δ_2 SC$[0, M^{-1}(1/(k+1))]$	SC$[0, \pi_M(1/k)]$
SS	Δ_2, ∇_2 S	Δ_2, ∇_2 S	Δ_2, ∇_2 S$[0, M^{-1}(1)]$	Δ_2, ∇_2 S$[0, \pi_M(1/2)]$
VS	as above	as above	as above	as above
S	Δ_2 S	Δ_2 S	Δ_2 S$[0, M^{-1}(1)]$	Δ_2 S$[0, \pi_M(1/2)]$

Theorems 2.2 and 2.4 were obtained by H. W. Milnes [181], K. Sundaresan [212], B. Turett [215], and C. Wu, S. Zhao & J. Chen [296] independently. In 1983, B. Lao & X. Zhu [162] investigated the extreme points and proved Theorems 2.1 and 2.3. Then

Z. Wang [269] and S. Chen & Y. Shen [38] (with a slight error there) obtained Theorems 2.6, 2.7 and Theorems 2.8, 2.9 respectively. For Orlicz spaces generated by more general Orlicz functions, the reader is referred to H. Hudzik & M. Wisła [128] and R. Grząślewicz, H. Hudzik & W. Kurc [85]; in the latter paper also Theorem 2.60 for that case was obtained.

Corollary 2.5 is due to the author, and k-rotundity is discussed by T. Wang & S. Chen [227], Z. Shi [208] and M. He [87].

Theorem 2.13 was obtained by A. S. Granero [80] and S. Chen, H. Sun & C. Wu [45] independently; the last paper also covers Theorems 2.14 and 2.20 which answer a question raised by R. M. Aron & R. H. Lohman [6]. Theorems 2.15 and 2.16 are taken from C. Wu & H. Sun [285].

The criteria for locally (weakly) uniform rotundity were found by A. Kamińska [137], S. Chen & Y. Wang [49], S. Chen [12], and S. Chen & Y. Shen [39] independently. Then T. Wang, Z. Ren & Y. Zhang [240] and T. Wang, Y. Li & Y. Zhang [238] characterized more precisely the uniformly rotund points in Orlicz spaces.

Theorem 2.30 is due to Y. Cui [53], but Lemmas 2.31 and 2.32 are from S. Chen & Y. Wang [47]. The author first considered the uniform rotundity in every direction for the Orlicz norm and obtained Corollary 2.36 (see S. Chen [12, 22]). But the criterion was discovered only recently while T. Wang, Z. Shi & Y. Cui [248, 249] presented an impressive and technical proof. For the Luxemburg norm, the problem was solved by A. Kamińska [138, 139] earlier in 1984.

The uniform rotundity was discussed by H. W. Milnes [181], A. Kamińska [136], T. Wang [224] and L. Tao [213], and then T. Wang & S. Chen [227] and Z. Shi [208] proved Theorem 2.37. But to establish Theorem 2.38 was rather puzzling; the work was done by T. Wang & S. Chen [228] and T. Wang & Z. Shi [243].

Theorem 2.40 is due to S. Chen, B. Lin & X. Yu [36] and T. Wang, Y. Zhang & B. Wang [262]. The weakly uniform rotundity was investigated by T. Wang, Y. Wang & Y. Li [258], S. Chen [12], L. Tao [213] and Y. Li [165], while Theorems 2.46 and 2.47 belong to T. Wang, Y. Wu & Y. Zhang [259].

Theorem 2.50 was first given by T. Wang & S. Chen [229]; Lemma 2.48 and Theorem 2.52 are due to S. Chen [13]. Recently, R. Grząślewicz & H. Hudzik [84] and S. Chen & X. Yu [51] obtained Theorem 2.49 independently, and Theorem 2.59 was obtained by S. Chen & Y. Duan [26]. Theorem 2.51 belongs to S. Chen [21], Theorems 2.54 and 2.56 are from L. Tao [214], Theorems 2.53 and 2.55 were given by B. Wang & Y. Zhang [219]. Theorem 2.58 is taken from T. Wang & Z. Shi [242] while Theorems 2.60–2.63 are taken or follow from B. Wang [216]. Theorem 2.64 can be found in B. Wang [217] and T. Wang, D. Ji & Z. Shi [237].

3. Other geometrical properties

3.1. Normal structure. Let X be a Banach space and $\{x_n\}$ a sequence in X such that $x_i \neq x_j$ whenever $i \neq j$. If for any $x \in \mathrm{co}\{x_n\}$, the convex hull of $\{x_n\}$, the limit $\Delta(x) = \lim_n \|x - x_n\| > 0$ exists and $\Delta(x)$ is affine on $\mathrm{co}\{x_n\}$, then $\{x_n\}$ is called a *limit affine sequence*. If, in particular, $\Delta(x)$ is a constant on $\mathrm{co}\{x_n\}$, then $\{x_n\}$ is called a *limit constant sequence*. If X contains no (weakly convergent) limit affine sequence $\{x_n\}$ satisfying $\Delta(x_n)\uparrow$, then it is said to have the (*weak*) *sum-property*. X is said to have the (*weakly*) *normal structure* (NS (WNS)) if it contains no (weakly) convergent limit constant sequence.

The original definition of the (weakly) normal structure is given in the following equivalent way:

X has the (weakly) normal structure iff for any nonsingleton (weakly compact) bounded closed convex subset C of X, there exists $x \in C$ such that

$$r_c(x) = \sup\{\|x - y\| : y \in C\} < \operatorname{diam} C = \sup\{\|u - v\| : u, v \in C\}.$$

If moreover, there exists $h > 0$ such that for each nonsingleton bounded closed convex subset C, there exists $x \in C$ such that $r_c(x) \leq (1 - h) \operatorname{diam} C$, then X is said to have the *uniformly normal structure* (UNS).

The above concepts are introduced as powerful tools in fixed point theory, for instance, if X has the weakly normal structure, then it has the weakly fixed point property (WFPP), i.e., any nonexpansive self-mapping defined on a weakly compact convex subset of X has a fixed point.

THEOREM 3.1. *Let $X = L_M, L_M^o, l_M$ or l_M^o. Then X has UNS iff it is reflexive.*

To prove the theorem, we need the following lemmas.

LEMMA 3.2. *Suppose $M \in \Delta_2$. Then for any $\beta > 1$ and $\varepsilon > 0$, there exists $K \geq 2$ such that for all $x \in L_M$,*

$$\varrho_M(\beta x) \leq K \varrho_M(x) + \varepsilon.$$

Proof. Let $\alpha > 0$ satisfy $M(\beta\alpha)\mu G < \varepsilon$. Then since $M \in \Delta_2$, there exists $K \geq 2$ such that $M(\beta\alpha) \leq KM(u)$ for all $u \geq \alpha$. For given $x \in L_M$, set $F = \{t \in G : |x(t)| \geq \alpha\}$. Then

$$\varrho_M(\beta x) = \varrho_M(\beta x|_F) + \varrho_M(\beta x|_{G\setminus F}) \leq K \varrho_M(x|_F) + M(\beta\alpha)\mu(G \setminus F) \leq K \varrho_M(x) + \varepsilon. \blacksquare$$

LEMMA 3.3. *Assume $M \in \Delta_2 \cap \nabla_2$. Then for any $\alpha > 0$, there exist $c > 1$ and $\delta > 0$ such that*

$$M\left(\frac{u+v}{2}\right) \le \frac{1-\delta}{2}[M(u)+M(v)]$$

whenever $|u| \ge \alpha$ *and* $|u| \ge c|v|$, *or* $uv \le 0$.

Proof. By Theorem 1.13, there exist $\gamma > 0$, and $\varepsilon \in (0, 1/2)$ such that

$$M\left(\frac{w}{2}\right) \le \frac{1-\gamma}{2} M(w) \qquad (|w| \ge \alpha)$$

and

$$M((1+\varepsilon)w) \le \frac{2}{2-\gamma} M(w) \qquad (|w| \ge \alpha).$$

Set

$$c = \frac{1}{\varepsilon}, \qquad \delta = 1 - \frac{2-2\gamma}{2-\gamma}.$$

Then $|u| \ge \alpha, |u| \ge c|v|$ or $uv \le 0$ imply

$$\begin{aligned} M\left(\frac{u+v}{2}\right) &\le M\left(\frac{1+c^{-1}}{2}u\right) \le \frac{1-\gamma}{2} M\left(\left(1+\frac{1}{c}\right)u\right) \\ &\le \frac{1-\gamma}{2}\frac{2}{2-\gamma} M(u) \le \frac{1-\delta}{2}[M(u)+M(v)]. \ \blacksquare \end{aligned}$$

LEMMA 3.4. *If a Banach space X does not have UNS, then for each $n \in \mathbb{N}$ and $\varepsilon > 0$, there exists $\{x_i : 1 \le i \le n+1\}$ in X such that*

$$\|x_j\| \le 1, \quad \|x_i - x_j\| \le 1 \quad (1 \le i \le j \le n+1)$$

and

$$\left\| x_{m+1} - \frac{1}{m}\sum_{i=1}^{m} x_i \right\| > 1 - \varepsilon \qquad (m = 1, \ldots, n).$$

Proof. By the assumption, there exists a bounded closed convex subset C of X such that for each $z \in C$, there exists $x \in C$ satisfying $\|z - x\| > (1-\varepsilon)\operatorname{diam} C$. Without loss of generality, we may assume $0 \in C$ and $\operatorname{diam} C = 1$, i.e., $\|x\| \le 1$ and $\|x - y\| \le 1$ for all $x, y \in C$.

Arbitrarily pick $x_1 \in C$. Then by the hypothesis, there exists $x_2 \in C$ such that $\|x_2 - x_1\| > 1 - \varepsilon$. Since C is convex, $(x_1 + x_2)/2 \in C$. Therefore, there exists $x_3 \in C$ such that $\|x_3 - (x_1 + x_2)/2\| > 1 - \varepsilon$. And so on, by induction, we finish the proof. $\blacksquare$

Proof of Theorem 3.1. We only prove the theorem for $X = L_M$; other cases are analogous.

Since all Banach spaces with UNS are reflexive, we only need to show the sufficiency. By Lemmas 3.2 and 3.3, there exist $K \ge 2$, $b > 0$, $c > 1$ and $\delta > 0$ such that

$$\varrho_M(2x) \le K\varrho_M(x) + 1/8 \qquad (x \in L_M), \tag{3.1}$$

$$M(b)\mu G \le 1/(8K) \tag{3.2}$$

and

$$M\left(\frac{u+v}{2}\right) \le \frac{1-\delta}{2}[M(u)+M(v)] \qquad (|u| \ge b,\ |u| \ge c|v|,\ \text{or } uv \le 0). \tag{3.3}$$

Select an integer $p > 16c^2K^2$ and let $n = 8p$. If L_M does not have UNS, then Lemma 3.4 and $M \in \Delta_2$ yield the existence of $\{x_i\}$ in L_M such that

$$\varrho_M(x_i) \le 1, \quad \varrho_M(x_i - x_j) \le 1 \quad (1 \le i \le j \le n+1) \tag{3.4}$$

and

$$1 \ge \varrho_M\left(x_{m+1} - \frac{1}{m}\sum_{i=1}^{m} x_i\right) > 1 - \frac{\delta}{4n^2K}. \tag{3.5}$$

We first introduce some notations. Set $u_i(t) = x_{n+1}(t) - x_i(t)$ $(i \le n)$ and for each $t \in G$, rearrange $\{u_i(t)\}_{i\le n}$ into $\{y_s(t) = u_{i_{s(t)}}(t)\}_{s\le n}$ such that $y_1(t) \le \ldots \le y_n(t)$. Then it is not difficult to check that each $y_s(t)$ is μ-measurable. Moreover, define

$$x(t) = [y_{4p}(t) + y_{4p+1}(t)]/2, \qquad x_0(t) = \frac{2}{n}\sum_{i=1}^{n} |u_i(t)|,$$

$$I(t) = \{i \le n : |u_i(t)| > c|x(t)| \text{ or } c|u_i(t)| < x(t)| \text{ or } u_i(t)x(t) \le 0\},$$

$$A = \{t \in G : I(t) \text{ contains at least } 4p \text{ elements}\}, \qquad B = G \setminus A.$$

Then

$$|x(t)| \le \max\{|y_s(t)|, |y_{4p+s}(t)|\} \le x_0(t). \tag{3.6}$$

Moreover, (3.1), (3.4) and the convexity of M imply

$$\varrho_M(x_0) \le K\varrho_M\left(\frac{1}{n}\sum_{i=1}^{n} |u_i|\right) + \frac{1}{8} \le \frac{K}{n}\sum_{i=1}^{n} \varrho_M(u_i) + \frac{1}{8} < K + \frac{1}{8}. \tag{3.7}$$

For the first step, we show that

$$\int_B M\left(\frac{x_1(t) - x_2(t)}{2}\right) dt > \frac{1}{2K}. \tag{3.8}$$

Since (3.4) and (3.1) yield

$$\frac{7}{8} < 1 - \frac{\delta}{4n^2K} < \varrho_M(x_1 - x_2) \le K\varrho_M\left(\frac{x_1 - x_2}{2}\right) + \frac{1}{8},$$

i.e., $\varrho_M(\frac{x_1-x_2}{2}) > \frac{3}{4K}$, to verify (3.8) it suffices to show

$$\int_A M\left(\frac{x_1(t) - x_2(t)}{2}\right) dt < \frac{1}{4K}.$$

For this purpose, we first check that $t \in A$ implies

$$|y_s(t)| > c|y_{4p+s}(t)| \quad \text{or} \quad c|y_s(t)| < |y_{4p+s}(t)| \quad \text{or} \quad y_s(t)y_{4p+s}(t) \le 0$$

for each $s \le 4p$. In fact, if there exist some $j \le 4p$ and $t \in A$ such that none of the above three inequalities holds, then we find

$$c^{-1}y_{4p+j}(t) \le y_j(t) \le cy_{4p+j}(t) \quad \text{or} \quad c^{-1}y_{4p+j}(t) \ge y_j(t) \ge cy_{4p+j}(t).$$

Since $x(t)$ is between $y_j(t)$ and $y_{4p+j}(t)$, we derive

$$c^{-1}x(t) \le y_s(t) \le cx(t) \quad \text{or} \quad c^{-1}x(t) \ge y_s(t) \ge cx(t)$$

for all $s = j, j+1, \ldots, 4p+j$, which contradicts the definition of A.

Hence, if we define, for each $s \le 4p$,

$$A(s) = \{t \in A : \max\{|y_s(t)|, |y_{4p+s}(t)|\} > b\},$$

then (3.3) and the convexity of M imply

$$\begin{aligned}
1 - \frac{\delta}{4n^2K} &< \varrho_M\left(x_{n+1} - \frac{1}{n}\sum_{i=1}^{n} x_i\right) \\
&= \varrho_M\left(\frac{2}{n}\sum_{s=1}^{4p}\frac{y_s + y_{4p+s}}{2}\right) \le \frac{2}{n}\sum_{s=1}^{4p}\varrho_M\left(\frac{y_s + y_{4p+s}}{2}\right) \\
&\le \frac{2}{n}\sum_{s=1}^{4p}\frac{1}{2}\int_{G\setminus A(s)} [M(y_s(t)) + M(y_{4p+s}(t))]\,dt \\
&\quad + \frac{2}{n}\sum_{s=1}^{4p}\frac{1}{2}(1-\delta)\int_{A(s)} [M(y_s(t)) + M(y_{4p+s}(t))]\,dt \\
&= \frac{1}{n}\sum_{i=1}^{n}\varrho_M(u_i) - \frac{\delta}{n}\sum_{s=1}^{4p}\int_{A(s)} [M(y_s(t)) + M(y_{4p+s}(t))]\,dt.
\end{aligned}$$

It follows from (3.4) that

$$\sum_{s=1}^{4p}\int_{A(s)} [M(y_s(t)) + M(y_{4p+s}(t))]\,dt < \frac{1}{4nK} < \frac{1}{8K}. \tag{3.9}$$

Now, we define

$$\begin{aligned}
D_i &= \{t \in A : |u_i(t)| > b\} \qquad (i = 1, 2), \\
B_i(s) &= \{t \in A : u_i(t) = y_s(t) \text{ or } y_{4p+s}(t)\} \qquad (i = 1, 2).
\end{aligned}$$

Then from (3.2), (3.9) and the fact that $\bigcup_{s=1}^{4p} B_i(s) = A$, $D_i \cap B_i(s) \subset A(s)$ $(i = 1, 2)$ we derive

$$\begin{aligned}
\int_A M\left(\frac{x_1(t) - x_2(t)}{2}\right) dt &= \int_A M\left(\frac{u_1(t) - u_2(t)}{2}\right) dt \le \frac{1}{2}\sum_{i=1}^{2}\int_A M(u_i(t))\,dt \\
&\le \frac{1}{2}\sum_{i=1}^{2}\int_{D_i} M(u_i(t))\,dt + M(b)\mu A \\
&= \frac{1}{2}\sum_{i=1}^{2}\sum_{s=1}^{4p}\int_{D_i\cap B_i(s)} M(u_i(t))\,dt + M(b)\mu A \\
&\le \frac{1}{2}\sum_{i=1}^{2}\sum_{s=1}^{4p}\int_{D_i\cap B_i(s)} [M(y_s(t)) + M(y_{4p+s}(t))]\,dt + M(b)\mu A \\
&< \frac{1}{8K} + \frac{1}{8K} = \frac{1}{4K}.
\end{aligned}$$

This ends the proof of inequality (3.8).

For the second step, we set, for each $i = 3, \dots, n-1$,

$$G(i) = \{t \in B : |x_s(t) - x_i(t)| \le c|x(t)|/p \text{ for some } s > i \text{ and } s \le n\}.$$

Then

$$\bigcup_{i=3}^{n-1} G(i) = B. \tag{3.10}$$

In fact, for any $t \in B = G \setminus A$, by the definition of A, there exist at least five $u_i(t)$ such that their distance from each other is no more than $c|x(t)|/p$, and thus, there exist $i, j,\ 3 \le i < j \le n$, such that

$$|u_i(t) - u_j(t)| \le c|x(t)|/p,$$

i.e., $t \in G(i)$. This proves (3.10).

Now, we define

$$D(3) = G(3), \qquad D(i) = G(i) \setminus \bigcup_{k=3}^{i-1} G(k) \quad (i = 4, \dots, n-1).$$

Then $\{D(i)\}_i$ are disjoint and $\bigcup_{i=3}^{n-1} D(i) = B$.

Let, for each $i = 3, \dots, n-1$ and each $t \in D(i)$,

$$i'(t) = i, \qquad i''(t) = \max\{k \le n : |x_k(t) - x_i(t)| \le c|x(t)|/p\}.$$

Then $i'(t)$, $i''(t)$ are well defined by the definition of $G(i)$ and $i'(t) < i''(t)$. Next, we construct two μ-measurable functions as follows:

$$x'(t) = \sum_{i=3}^{n-1} x_{i'(t)}(t)\chi_{D(i)}(t), \qquad x''(t) = \sum_{i=3}^{n-1} x_{i''(t)}(t)\chi_{D(i)}(t).$$

Then by (3.6) and the definition of $i'(t), i''(t)$,

$$|x'(t) - x''(t)| \le c|x(t)|/p \le cx_0(t)/p. \tag{3.11}$$

Since (3.8) and the convexity of M imply

$$\frac{1}{2}\int_B [M(x''(t) - x_1(t)) + M(x''(t) - x_2(t))]\,dt \ge \int_B M\left(\frac{x_1(t) - x_2(t)}{2}\right) dt > \frac{1}{2K},$$

without loss of generality, we assume

$$\int_B M(x''(t) - x_1(t))\,dt > \frac{1}{2K}. \tag{3.12}$$

Finally, let

$$E = \{t \in B : |x''(t) - x_1(t)| \ge \max\{b, c^2 x_0(t)/p\}\}.$$

Then by (3.11), $t \in E$ implies $|x''(t) - x_1(t)| \ge c^2 x_0(t)/p \ge |x'(t) - x''(t)|$. It follows from (3.3) that $t \in E$ implies

$$\begin{aligned} M\left(\frac{x''(t) - x'(t) + x''(t) - x_1(t)}{2}\right) \\ \le \frac{1-\delta}{2}[M(x''(t) - x'(t)) + M(x''(t) - x_1(t))]. \end{aligned} \tag{3.13}$$

Moreover, (3.12), (3.3), (3.1), (3.7) and the inequalities $c^2/p < (4K)^{-2} < 1$ imply that

$$\begin{aligned}
(3.14)\quad \int_E M(x''(t)-x_1(t))\,dt &= \int_B M(x''(t)-x_1(t))\,dt - \int_{B\setminus E} M(x''(t)-x_1(t))\,dt \\
&> \frac{1}{2K} - \Bigg[\int_{B\setminus E} M\Bigg(\frac{c^2x_0(t)}{p}\Bigg)\,dt + M(b)\mu(B\setminus E)\Bigg] \\
&\geq \frac{1}{2K} - \Bigg[\frac{c^2}{p}\int_G M(x_0(t))\,dt + \frac{1}{8K}\Bigg] \\
&\geq \frac{1}{2K} - \Bigg[\frac{c^2}{p}\Bigg(K+\frac{1}{8}\Bigg) + \frac{1}{8K}\Bigg] \\
&> \frac{1}{2K} - \frac{1}{8K} - \frac{1}{8K} = \frac{1}{4K}.
\end{aligned}$$

In light of (3.13) and the convexity of M, for all $t \in E$, we have

$$\begin{aligned}
&\sum_{m=2}^{n} M\Bigg(\frac{1}{m-1}\sum_{k=1}^{m-1}(x_m(t)-x_k(t))\Bigg) \\
&\quad= \sum_{\substack{2\leq m\leq n\\ m\neq i''(t)}} M\Bigg(\frac{1}{m-1}\sum_{k=1}^{m-1}(x_m(t)-x_k(t))\Bigg) \\
&\qquad + M\Bigg(\frac{1}{i''(t)-1}\Bigg[\sum_{\substack{2\leq k\leq i''(t)-1\\ k\neq i'(t)}}(x''(t)-x_k(t)) + 2\frac{x''(t)-x'(t)+x''(t)-x_1(t)}{2}\Bigg]\Bigg) \\
&\quad\leq \sum_{\substack{2\leq m\leq n\\ m\neq i''(t)}} M\Bigg(\frac{1}{m-1}\sum_{k=1}^{m-1}(x_m(t)-x_k(t))\Bigg) \\
&\qquad + \frac{1}{i''(t)-1}\Bigg[\sum_{\substack{2\leq k\leq i''(t)-1\\ k\neq i'(t)}} M(x''(t)-x_k(t)) + 2M\Bigg(\frac{x''(t)-x'(t)+x''(t)-x_1(t)}{2}\Bigg)\Bigg] \\
&\quad\leq \sum_{m=2}^{n}\frac{1}{m-1}\sum_{k=1}^{m-1} M(x''(t)-x_k(t)) \\
&\qquad - \frac{\delta}{i''(t)-1}[M(x''(t)-x'(t)) + M(x''(t)-x_1(t))].
\end{aligned}$$

Combining this with (3.5), (3.14) and $x''(t)-1 \leq n-1$, we deduce

$$\begin{aligned}
1-\frac{\delta}{4n^2K} &< \frac{1}{n-1}\sum_{m=2}^{n}\varrho_M\Bigg(x_m - \frac{1}{m-1}\sum_{k=1}^{m-1}x_k\Bigg) \\
&\leq \frac{1}{n-1}\sum_{m=2}^{n}\frac{1}{m-1}\sum_{k=1}^{m-1}\varrho_M(x_m-x_k)
\end{aligned}$$

$$
\begin{aligned}
&- \frac{\delta}{n(n-1)} \int_E [M(x''(t) - x'(t)) + M(x''(t) - x_1(t))]\, dt \\
&< 1 - \frac{\delta}{4n^2 K}.
\end{aligned}
$$

This contradiction completes the proof. ∎

LEMMA 3.5. *Suppose $x_n \in B(L_M)$ and $x_n \to x$ in measure. Then $x \in B(L_M)$.*

Proof. Since $\varrho_M(x_n) \le 1$, by the Fatou Lemma, we have $\varrho_M(x) \le \liminf_n \varrho_M(x_n) \le 1$. ∎

THEOREM 3.6. *L_M^o and l_M^o have the weak sum-property, therefore, they have WNS.*

THEOREM 3.7. *Let $X = L_M^o, E_M^o, l_M^o$ or h_M^o. Then the following are equivalent*:

(i) *X has the sum-property.*
(ii) *X has NS.*
(iii) *There exist $a > 0$ and $c > 1$ such that for any SAI $[u, v]$ of M,*

$$
\begin{aligned}
u > a \Rightarrow v \le cu \quad & (\textit{when } X = L_M^o \textit{ or } E_M^o), \\
0 < u \le a \Rightarrow v \le cu \quad & (\textit{when } X = l_M^o \textit{ or } h_M^o).
\end{aligned}
$$

Proof of Theorems 3.6 and 3.7. We only prove the two theorems for $X = L_M^o$ and $X = E_M^o$. Let $\{x_n\}$ be a limit affine sequence in L_M^o and $k_{ij} \in K(x_i - x_j)$ $(i \ne j)$. First we show that there exists a subsequence N_1 of $\mathbb{N}$ such that for any $j \in N_1$, $\{k_{ij} : i \in N_1\}$ is bounded. Indeed, if $\{k_{ij} : i \in \mathbb{N}\}$ is bounded for all $j \in \mathbb{N}$, then we set $N_1 = \mathbb{N}$. Otherwise, there exist some $m \in \mathbb{N}$ and a subsequence I of $\mathbb{N}$ such that $k_{im} \to \infty$ as $i (\in I) \to \infty$. This shows that $\{x_i : i \in I\}$ converges to x_m in measure according to Lemma 2.31. Since $x_i \ne x_j$ for all $i \ne j$, by the same reason, we find that $N_1 = I \setminus \{m\}$ satisfies our requirement.

By the diagonal method, we can pick a subsequence N_2 of N_1 such that $k_{ij} \to k_j < \infty$ as $i (\in N_2) \to \infty$ for each $j \in N_1$. We claim that $k_j \to \infty$ as $i (\in N_2) \to \infty$. In fact, if this is not true, then N_2 contains a subsequence N_3 such that $k_j \to k < \infty$ as $j (\in N_3) \to \infty$. Therefore, for all $n, i, j \in N_3$ with $n \ne i, j$,

$$
\begin{aligned}
(3.15) \qquad & \|x_n - x_i\|^o + \|x_n - x_j\|^o - \|2x_n - x_i - x_j\|^o \\
&\ge \frac{1}{k_{ni}}[1 + \varrho_M(k_{ni}(x_n - x_i))] + \frac{1}{k_{nj}}[1 + \varrho_M(k_{nj}(x_n - x_j))] \\
&\quad - \frac{k_{ni} + k_{nj}}{k_{ni}k_{nj}} \left[1 + \varrho_M\left(\frac{k_{ni}k_{nj}}{k_{ni} + k_{nj}}(2x_n - x_i - x_j)\right)\right] \\
&= \int_G \left\{ \frac{1}{k_{ni}} M(k_{ni}(x_n(t) - x_i(t))) + \frac{1}{k_{nj}} M(k_{nj}(x_n(t) - x_j(t))) \right. \\
&\quad \left. - \frac{k_{ni} + k_{nj}}{k_{ni}k_{nj}} M\left(\frac{k_{ni}k_{nj}}{k_{ni} + k_{nj}}(2x_n(t) - x_i(t) - x_j(t))\right) \right\} dt.
\end{aligned}
$$

Denote the last integrand in (3.15) by $f_n^{ij}(t)$. Then $f_n^{ij}(t) \ge 0$ for all $t \in G$ since M is convex. Recall that $\Delta(x)$ is affine on $\mathrm{co}\{x_k\}$. By letting $n \to \infty$ we get $\int_G f_n^{ij}(t)\, dt \to 0$, and

thus $f_n^{ij}(t) \to 0$ in measure. Hence, the diagonal method allows us to find a subsequence N_4 of N_3 such that $f_n^{ij}(t) \to 0$ μ-a.e. on G as $n(\in N_4) \to \infty$ for all $i, j \in N_3$.

Now, for each $t \in G$, we pick a subsequence $\{n_\gamma = n_\gamma(t)\}$ of N_4 such that

$$|v(t)| = \liminf_{n \in N_4} |x_n(t)|, \qquad \lim_\gamma x_{n_\gamma}(t) = v(t). \tag{3.16}$$

Then by the Fatou Lemma, $|v(t)| < \infty$ μ-a.e. on G (one may prove this analogously to the proof of Lemma 3.12). Let $\gamma \to \infty$. Then the convexity of M shows

$$\begin{aligned} 0 = \lim_\gamma f_{n_\gamma}^{ij}(t) &= \frac{1}{k_i} M(k_i(v(t) - x_i(t))) + \frac{1}{k_j} M(k_j(v(t) - x_j(t))) \\ &\quad - \frac{k_i + k_j}{k_i k_j} M\left(\frac{k_i k_j}{k_i + k_j}(2v(t) - x_i(t) - x_j(t))\right) \end{aligned} \tag{3.17}$$

μ-a.e. on G. Since for μ-a.e. $t \in G$, (3.17) holds for all $i, j \in N_3$, by replacing j by n_γ in (3.17) and letting $\gamma \to \infty$, we have, for μ-a.e. $t \in G$,

$$\frac{1}{k_i} M(k_i(v(t) - x_i(t))) = \frac{k_i + k}{k_i k} M\left(\frac{k_i k}{k_i + k}(v(t) - x_i(t))\right). \tag{3.18}$$

Since $0 < k/(k_i + k) < 1$, by (1.6), (3.18) holds only for $v(t) = x_i(t)$. This means $v = x_i$ for all $i \in N_3$, contradicting the assumption that $x_i \neq x_j$ whenever $i \neq j$. This contradiction proves $k_j \to \infty$ as $j(\in N_3) \to \infty$.

Now, we prove (iii) $\Rightarrow$ (i) in Theorem 3.7. If L_M^o does not have the sum-property, then there exists a limit affine sequence $\{y_n\}$ in L_M^o such that $\Delta(y_n)\uparrow$. By the above discussion, $\{y_n\}$ contains a subsequence $\{x_n\}$ satisfying $k_{ij} \to k_j < \infty$ as $i \to \infty$, and $k_j \to \infty$ as $j \to \infty$, where $k_{ij} \in K(x_i - x_j), i \neq j$. Since $M(u)/u \to \infty$ as $u \to \infty$, for the constant $a > 0$ in (iii), we can find $b > a$ such that

$$M\left(\frac{a+b}{2}\right) < \frac{M(a) + M(b)}{2}.$$

Since M is convex, by (iii),

$$M(\alpha u + (1-\alpha)v) < \alpha M(u) + (1-\alpha) M(v) \tag{3.19}$$

for all $0 < \alpha < 1$ and all $u \le a, v \ge b$ or $u \ge a, v \ge cu$. If we define $v(t)$ as in (3.16), then by (3.16) and (3.19), for μ-a.e. $t \in G$, if $k_i|v(t) - x_i(t)| \le a$, then $k_j|v(t) - x_j(t)| \le b$; if $k_i|v(t) - x_i(t)| > a$, then $k_j|v(t) - x_j(t)| \le ck_i|v(t) - x_i(t)|$. Therefore, for μ-a.e. $t \in G$,

$$k_j|v(t) - x_j(t)| \le \max\{b, ck_i|v(t) - x_i(t)|\} =: u_i(t). \tag{3.20}$$

By the Fatou Lemma,

$$\Delta(x_j) \ge k_j^{-1}[1 + \varrho_M(k_j(v - x_j))] \ge \|v - x_j\|^o. \tag{3.21}$$

Thus, $v - x_j \in L_M$, whence, $u_i \in L_M$. Since $\Delta > 0$, $\liminf_j \|v - x_j\|^o := \gamma > 0$. It follows from (3.20) that $k_j = \|k_j(v - x_j)\|^o / \|v - x_j\|^o \le \|u_i\|^o / \|v - x_j\|^o$. Letting $j \to \infty$, we get a contradiction: $\infty = \|u_i\|^o / \gamma < \infty$.

Next, we turn to Theorem 3.6. If L_M^o does not have the weak sum-property, then by (3.15), there exists a weakly convergent (to zero) limit affine sequence (x_n) with $\|x_n\|^o \to 1$ and $\Delta(x_n) \to 1$. By the first part of the proof, passing to a subsequence if necessary, we may assume $k_{ij} \to k_j < \infty$ as $i \to \infty$ and $k_j \to \infty$ as $j \to \infty$, where

$k_{ij} \in K(x_i - x_j)$. It follows from (3.21) that $x_j \to v$ in measure (verified as in the first part of the proof). Therefore, by Lemma 2.45, $v = 0$. We may also assume $x_j \to 0$ μ-a.e. on G. We prove the theorem by showing $\lim \Delta(x_j) \geq 4/3$, which contradicts the assumption $\Delta(x_j) \to 1$.

For each $j \in \mathbb{N}$, we choose a set $G_j \in \Sigma$ such that x_j is bounded on G_j and

$$k_j^{-1}[1 + \varrho_M(k_j x_j \chi_{G_j})] > k_j^{-1}[1 + \varrho_M(k_j x_j)] - 1/k_j.$$

Then by (3.21),

$$\begin{aligned}\Delta(x_j) &\geq k_j^{-1}[1 + \varrho_M(k_j x_j)] = k_j^{-1}[1 + \varrho_M(k_j x_j \chi_{G_j})] + k_j^{-1}[1 + \varrho_M(k_j x_j \chi_{G \setminus G_j})] - 1/k_j \\ &> k_j^{-1}[1 + \varrho_M(k_j x_j)] - 1/k_j + \|x_j \chi_{G \setminus G_j}\|^o - 1/k_j \geq \|x_j\|^o + \|x_j \chi_{G \setminus G_j}\|^o - 2/k_j,\end{aligned}$$

i.e.,

$$\|x_j \chi_{G \setminus G_j}\|^o < \Delta(x_j) - \|x_j\|^o - 2/k_j. \tag{3.22}$$

It follows that

$$\|x_j \chi_{G_j}\|^o \geq \|x_j\|^o - \|x_j \chi_{G \setminus G_j}\|^o > 2\|x_j\|^o - \Delta(x_j) - 2/k_j. \tag{3.23}$$

Since x_j is bounded on G_j, there exists $\delta = \delta(j) > 0$ such that

$$\|x_j \chi_E\|^o < 1/k_j \qquad \text{whenever } E \subset G_j \text{ and } \mu E < \delta. \tag{3.24}$$

Since $x_i \to 0$ μ-a.e. on G, there exists $F \in \Sigma$ with $\mu F < \delta$ such that $x_i \to 0$ uniformly on $G \setminus F$. Hence, there exists $I = I(j) \in \mathbb{N}$ such that for all $i > I$,

$$\|x_i \chi_{G \setminus F}\|^o < 1/k_j. \tag{3.25}$$

It follows that

$$\|x_j \chi_F\|^o \geq \|x_i\|^o - \|x_i \chi_{G \setminus F}\|^o > \|x_i\|^o - 1/k_j. \tag{3.26}$$

Hence, by (3.22)–(3.26),

$$\begin{aligned}\|x_i - x_j\|^o &= k_{ij}^{-1}[1 + \varrho_M(k_{ij}(x_i - x_j)\chi_{G \setminus (G_j \setminus F)})] \\ &\quad + k_{ij}^{-1}[1 + \varrho_M(k_{ij}(x_i - x_j)\chi_{G_j \setminus F})] - 1/k_{ij} \\ &\geq \|(x_i - x_j)\chi_{G \setminus (G_j \setminus F)}\|^o + \|(x_i - x_j)\chi_{G_j \setminus F}\|^o - 1/k_{ij} \\ &\geq \|x_i \chi_{G \setminus (G_j \setminus F)}\|^o - \|x_j \chi_{G \setminus (G_j \setminus F)}\|^o \\ &\quad + \|x_j \chi_{G_j \setminus F}\|^o - \|x_i \chi_{G_j \setminus F}\|^o - 1/k_{ij} \\ &= \|x_i \chi_{G \setminus (G_j \setminus F)}\|^o - \|x_j \chi_{G \setminus G_j} + x_j \chi_{G_j \cap F}\|^o \\ &\quad + \|x_j \chi_{G_j} - x_j \chi_{G_j \cap F}\|^o - \|x_i \chi_{G_j \setminus F}\|^o - 1/k_{ij} \\ &> (\|x_i\|^o - 1/k_j) - (\Delta(x_j) - \|x_j\|^o + 2/k_j + 1/k_j) \\ &\quad + (2\|x_j\|^o - \Delta(x_j) - 2/k_j - 1/k_j) - 1/k_j - 1/k_{ij} \\ &= \|x_i\|^o + 3\|x_j\|^o - 2\Delta(x_j) - 8/k_j - 1/k_{ij}.\end{aligned}$$

Letting $i \to \infty$, we have $\Delta(x_j) \geq 1 + 3\|x_j\|^o - 2\Delta(x_j) - 9/k_j$. Hence, $\lim_j \Delta(x_j) \geq 4/3$.

Finally, we prove (ii)⇒(iii) of Theorem 3.7. If (iii) does not hold, then there exist sequences $\{u_j\}, \{v_j\}$ such that $M(u_1)\mu G > 1$, $u_{j+1} > 2^j u_j$, $v_j > 2^j u_j$ and $p(u)$ is a constant on $[u_j, v_j]$, $j \in \mathbb{N}$. By the first two assumptions, we can choose disjoint sets

$G_j \in \Sigma$ such that $\mu(G \setminus \bigcup_{j\in\mathbb{N}} G_j) > 0$ and

$$2^{-j} = u_j p(u_j)\mu G_j = [M(u_j) + N(p(u_j))]\mu G_j. \tag{3.27}$$

Hence, we can find u_0 large enough so that there is $G_0 \subset G \setminus \bigcup_j G_j$ satisfying

$$\sum_{j\in\mathbb{N}} N(p(u_j))\mu G_j + N(p(u_0))\mu G_0 = 1. \tag{3.28}$$

Define

$$v = \sum_{j\geq 0} p(u_j)\chi_{G_j}, \qquad x_n = u_0\chi_{G_0} + \sum_{j\leq n} v_j\chi_{G_j} + \sum_{j>n} u_j\chi_{G_j}.$$

Then by (3.28), $\varrho_N(v) = 1$, whence $v \in L_M^*$ and $\|v\|_N = 1$.

First we show that $x_n \in E_M$ for any $n \in \mathbb{N}$. Given arbitrary $K > 1$, choose $J > n$ such that $2^J > K$. Then for all $j > J$, $v_j > 2^j u_j > Ku_j > u_j$. Therefore,

$$\begin{aligned}\sum_{j>J} M(Ku_j)\mu G_j &= \sum_{j>J}[Ku_j p(Ku_j) - N(p(Ku_j))]\mu G_j < \sum_{j>J} Ku_j p(Ku_j)\mu G_j \\ &= \sum_{j>J} Ku_j p(u_j)\mu G_j = K\sum_{j>J} 2^{-j} < \infty.\end{aligned}$$

This implies $\varrho_M(Kx_n) < \infty$. Since $K > 1$ is arbitrary, we have $x_n \in E_M$.

Let $k_n = \|x_n\|^o$ and $y_n = x_n/k_n$. Then $y_n \in E_M$ and $\|y_n\|^o = 1$. By (3.28),

$$\begin{aligned}\|y_n\|^o \geq \langle v, y_n\rangle &= k_n^{-1}\Big[u_0 p(u_0)\mu G_0 + \sum_{j\leq n} v_j p(u_j)\mu G_j + \sum_{j>n} u_j p(u_j)\mu G_j\Big] \\ &= k_n^{-1}[\varrho_N(v) + \varrho_M(k_n y_n)] \geq \|y_n\|^o = 1.\end{aligned}$$

Moreover, since

$$k_n = \|x_n\|^o \geq \langle v, x_n\rangle > \sum_{j\leq n} v_j p(u_j)\mu G_j \geq \sum_{j\leq n} 2^j u_j p(u_j)\mu G_j = n,$$

we have $k_n \to \infty$ as $n \to \infty$.

We complete the proof by showing $\Delta = 2$ on $\mathrm{co}(y_n)$. Indeed, for any $y \in \mathrm{co}(y_n)$, there exist $\lambda_i \geq 0$ with $\sum_{i\leq m}\lambda_i = 1$ such that $y = \sum_{i\leq m}\lambda_i y_i$. Since $\langle v, y_n\rangle = 1$, we have $\langle v, y\rangle = \sum_{i\leq m}\lambda_i\langle v, y_n\rangle = 1$. For any $\varepsilon > 0$, since $y \in E_M$, there exists $I > m$ such that $\|y\chi_F\|^o < \varepsilon$, where $F = \bigcup_{i\geq I} G_i$. In view of $x_n(t) \leq \max\{v_I, u_0\}$ on $G \setminus F$ and $k_n \to \infty$ as $n \to \infty$, we can find $n_0 \in \mathbb{N}$ such that $\|y_n\chi_{G\setminus F}\|^o < \varepsilon$ for all $n > n_0$. Define $v_0 = v\chi_{G\setminus F} - v\chi_F$. Then $\|v_0\|_N = \|v\|_N$ and for all $n > n_0$,

$$\begin{aligned}2 &\geq \|y\|^o + \|y_n\|^o \geq \|y - y_n\|^o \geq \langle v_0, y - y_n\rangle \\ &= \langle v_0, y\chi_{G\setminus F}\rangle + \langle v_0, y\chi_F\rangle - \langle v_0, y_n\chi_{G\setminus F}\rangle - \langle v_0, y_n\chi_F\rangle \\ &= \langle v, y\chi_{G\setminus F}\rangle - \langle v, y\chi_F\rangle - \langle v, y_n\chi_{G\setminus F}\rangle + \langle v, y_n\chi_F\rangle \\ &= \langle v, y\rangle - 2\langle v, y\chi_F\rangle - 2\langle v, y_n\chi_{G\setminus F}\rangle + \langle v, y_n\rangle \\ &> 1 - 2\|y\chi_F\|^o - 2\|y_n\chi_{G\setminus F}\|^o + 1 > 2 - 4\varepsilon,\end{aligned}$$

which shows that $\Delta(y) = 2$. ∎

THEOREM 3.8. *Let $X = L_M, E_M, l_M$ or h_M. Then the following are equivalent*:

(i) *X has the sum-property.*
(ii) *X has WNS.*
(iii) *$M \in \Delta_2$.*

Proof. This time, we prove the theorem for $X = l_M$ and $X = h_M$.

(i)⇒(ii). Trivial.

(ii)⇒(iii). If $M \notin \Delta_2$, then there exist $\alpha_k \downarrow 0$ such that $M(\alpha_1) < \varepsilon$ and $M((1+1/k)\alpha_k) > 2^k M(\alpha_k)$ $(k \in \mathbb{N})$, where $\varepsilon < 1$ is a given constant. For each $k \in \mathbb{N}$, choose an integer m_k such that

$$m_k M(\alpha_k) \le \varepsilon/2^k, \qquad (m_k+1)M(\alpha_k) > \varepsilon/2^k$$

and define

$$x_n(i) = \alpha_n \sum_{i=1}^{m_n} e_{i+s_n} \qquad (n \in \mathbb{N}),$$

where $\{e_i\}$ is the natural basis of c_0 and $s_n = \sum_{i=1}^{n-1} m_i$. Obviously, $\{x_n\}$ have mutually disjoint supports, and so, $\varrho_M\,(x_i - x_j) \le \varepsilon/2^i + \varepsilon/2^j < 1$ $(i \ne j)$. Moreover, for any $\nu > 1$, it is easy to check that $\varrho_M(\nu x_n) \to \infty$ as $n \to \infty$. Therefore, for any $n \in \mathbb{N}$, $\Delta(x_n) = 1$ and $\Delta(x) = 1$ for all $x \in \mathrm{co}\{x_n\}$. Clearly, $x_n \to 0$ l_N-weakly, i.e., $x_n \to 0$ weakly in h_M. This means that $\{x_n\}$ is a weakly convergent limit constant sequence, thus, h_M does not have WNS.

(iii)⇒(i). Assume that l_M has a limit affine sequence $\{x_n\}$ with $\Delta(x_n) \uparrow \Delta'$. By the diagonal method, we can find a subsequence of $\{x_n\}$, again denoted by $\{x_n\}$, such that $x_n \to x$ coordinatewise. By Lemma 3.5, $x \in l_M$. Hence, we may assume that $x_n \to 0$ coordinatewise and that $\Delta' = \lim \Delta(x_n) > 0$.

For any $i, j \in \mathbb{N}$, since Δ is affine on $\mathrm{co}\{x_n\}$,

$$\lim_n \|2x_n - x_i - x_j\| = \Delta(x_i) + \Delta(x_j).$$

Hence, as $M \in \Delta_2$,

$$\lim_n \varrho_M\left(\frac{x_n - x_i}{\Delta(x_i)}\right) = \lim_n \varrho_M\left(\frac{x_n - x_j}{\Delta(x_j)}\right) = \lim_n \varrho_M\left(\frac{2x_n - x_i - x_j}{\Delta(x_i) + \Delta(x_j)}\right) = 1. \tag{3.29}$$

Let $\lambda_{ij} = \Delta(x_i)/(\Delta(x_i) + \Delta(x_j))$. Then by the convexity of M,

$$\begin{aligned} \lambda_{ij}\varrho_M\left(\frac{x_n - x_i}{\Delta(x_i)}\right) + (1-\lambda_{ij})\varrho_M\left(\frac{x_n - x_j}{\Delta(x_j)}\right) - \varrho_M\left(\frac{2x_n - x_i - x_j}{\Delta(x_i) + \Delta(x_j)}\right) \\ \ge \lambda_{ij} M\left(\frac{x_n(k) - x_i(k)}{\Delta(x_i)}\right) + (1-\lambda_{ij}) M\left(\frac{x_n(k) - x_j(k)}{\Delta(x_j)}\right) \\ - M\left(\frac{2x_n(k) - x_i(k) - x_j(k)}{\Delta(x_i) + \Delta(x_j)}\right) \\ \ge 0 \qquad (k \in \mathbb{N}). \end{aligned} \tag{3.30}$$

Recall that $x_n \to 0$ coordinatewise; by letting $n \to \infty$, we find from (3.29) and (3.30)

that

$$\lambda_{ij} M\left(\frac{x_i(k)}{\Delta(x_i)}\right) + (1-\lambda_{ij}) M\left(\frac{x_j(k)}{\Delta(x_j)}\right) = M\left(\frac{x_i(k)+x_j(k)}{\Delta(x_i)+\Delta(x_j)}\right) \qquad (k \in \mathbb{N}).$$

Letting $j \to \infty$, this equality becomes

$$\frac{\Delta(x_i)}{\Delta(x_i)+\Delta'} M\left(\frac{x_i(k)}{\Delta(x_i)}\right) = M\left(\frac{x_i(k)}{\Delta(x_i)+\Delta'}\right) \qquad (k \in \mathbb{N}).$$

But $0 < \Delta(x_i)/(\Delta(x_i)+\Delta') < 1$, by (1.6), so the above equality holds only for $x_i(k) = 0$. This means $x_i = 0$ $(i \in \mathbb{N})$, contradicting the assumption that $\{x_n\}$ is a limit affine sequence. ∎

To end this section, we present a different sufficient condition for h_M to have the weakly fixed point property.

LEMMA 3.9. *h_M has the weak orthogonality property, i.e., for any $x_n \to 0$ weakly in h_M,*

$$\liminf_n \liminf_m \| \, |x_n| \wedge |x_m| \, \| = 0,$$

where $(x \wedge y)(t) = \min\{x(t), y(t)\}$ and $(x \vee y)(t) = \max\{x(t), y(t)\}$.

Proof. The lemma results from the obvious fact that the mapping $y \to |x| \wedge |y|$ is weak-norm continuous for every fixed $x \in h_M$. ∎

LEMMA 3.10. *The Riesz angle $\alpha(l_M) < 2$ iff $M \in \nabla_2$, where*

$$\alpha(l_M) = \sup\{\| \, |x| \vee |y| \, \| : \|x\| \le 1, \ \|y\| \le 1\}.$$

Proof. If $M \notin \nabla_2$, then there exist $u_n \downarrow 0$ such that

$$2M(u_n/2) > (1-1/n)M(u_n) \qquad (n \in \mathbb{N}). \tag{3.31}$$

Let m_n be an integer satisfying $m_n M(u_n) \le 1$ and $(m_n+1)M(u_n) > 1$. Define

$$x_n = u_n \sum_{i=1}^{m_n} e_i, \qquad y_n = u_n \sum_{i=m_n+1}^{2m_n} e_i.$$

Then it is easy to check that $1 \ge \varrho_M(x_n) = \varrho_M(y_n) \to 1$ and by (3.31),

$$\varrho_M\left(\frac{x_n \vee y_n}{2}\right) = 2m_n M\left(\frac{u_n}{2}\right) > \left(1-\frac{1}{n}\right) m_n M(u_n) \to 1.$$

This shows that $\|x_n \vee y_n\| \to 2$.

Next we assume $M \in \nabla_2$, i.e., there exists $\delta > 0$ such that

$$M((2-\delta)u) \ge 2M(u) \qquad (|u| \le M^{-1}(1)).$$

Given $x, y \in B(l_M)$, we have $|x(i)|, |y(i)| \le M^{-1}(1)$, whence

$$\varrho_M\left(\frac{|x| \vee |y|}{2-\delta}\right) = \varrho_M\left(\frac{x}{2-\delta}\right) + \varrho_M\left(\frac{y}{2-\delta}\right) \le \frac{1}{2}[\varrho_M(x) + \varrho_M(y)] \le 1,$$

i.e., $\| \, |x| \vee |y| \, \| \le 2-\delta$. ∎

Applying a result of J. M. Borwein & B. Sims [10] stating that every orthogonal Banach lattice X with Riesz angle $\alpha(X) < 2$ has the weakly fixed point property, from Lemmas 3.9 and 3.10 we deduce the following

THEOREM 3.11. *If $M \in \nabla_2$, then h_M has the weakly fixed point property.*

REMARKS. 1. Theorems 3.8 and 3.11 furnish a natural example of a space with the weakly fixed point property but without WNS.

2. P. N. Dowling, C. J. Lennard & B. Turett [74] investigated the Banach spaces for which every nonexpansive self-mapping of a nonempty, closed, bounded, convex subset has a fixed point. Call this property the *fixed point property* (FPP). They proved in [74] that L_M^o has FPP iff it is reflexive. In fact, this can be obtained immediately from Theorems 1.90, 3.1 and the following two results given by P. N. Dowling & C. J. Lennard [73] and the author respectively:

(a) A Banach space S fails FPP if it contains an asymptotically isometric copy of l^1, i.e., for every positive sequence (ε_n) decreasing to 0, there exists a sequence (x_n) of norm-one elements in X such that $\sum_n (1-\varepsilon_n)|\alpha_n| \le \|\sum_n \alpha_n x_n\|$ for all sequences (α_n) of real numbers.

(b) If the dual of X contains an isometric copy of l^∞, then X contains an asymptotically isometric copy of l^1.

It is still an open problem whether the above conclusion is true or not for the Orlicz space L_M. The only trouble is that one cannot prove the necessity of $M \in \nabla_2$ in the same way.

3.2. H-property. Let X be a Banach space and $x \in S(X)$. If $x_n \in X, x_n \to x$ weakly and $\|x_n\| \to \|x\| = 1$ imply $x_n \to x$ in norm, then we call x an *H-point* of $B(X)$. If every point in $S(X)$ is an H-point of $B(X)$, then we say that X has the *H-property.* X is said to have the *uniform Klee–Kadec property* (UKK) if for any $\varepsilon > 0$, there exists $\delta > 0$ such that $x_n \in B(X), x_n \to x$ weakly and $\|x_n - x_m\| \ge \varepsilon$ $(n \ne m)$ imply $\|x\| \le 1-\delta$. Finally, X is *nearly uniformly convex* (NUC) if for any $\varepsilon > 0$, there exists $\delta < 1$ such that $x_n \in B(X)$ and $\|x_n - x_m\| \ge \varepsilon$ $(n \ne m)$ imply $\mathrm{co}\{x_n\} \cap \delta B(X) \ne \emptyset$.

It is known that

$$\mathrm{UR} \Rightarrow \mathrm{NUC} \Rightarrow \mathrm{UKK} \Rightarrow H\text{-property}.$$

LEMMA 3.12. *Let $E \in \Sigma$ be a closed bounded set. Then E can be decomposed into E_n, F_n such that $E_n \cup F_n = E$, $\mu E_n = \mu F_n = 2^{-1}\mu E$ $(n \in \mathbb{N})$ and for any integrable function $v(t)$ on E,*

$$\lim_n \int_E v(t)[\chi_{E_n}(t) - \chi_{F_n}(t)]\,dt = 0. \tag{3.32}$$

Proof. Choose a countable dense set $\{t_k\}$ in E. For any $n \in \mathbb{N}$, let

$$V_{n,k} = \{t \in E : |t - t_k| < 1/n\} \qquad (k \in \mathbb{N})$$

and decompose $V_{n,k} \setminus \bigcup_{j=1}^{k-1} V_{n,j}$ into two sets $E_{n,k}$ and $F_{n,k}$ such that $\mu E_{n,k} = \mu F_{n,k}$. We claim that $E_n = \bigcup_{k=1}^\infty E_{n,k}$, $F_n = \bigcup_{k=1}^\infty F_{n,k}$ satisfy the requirement. Indeed, it is obvious that E_n and F_n are disjoint and $\mu E_n = \mu F_n = 2^{-1}\mu E$. Moreover, for any integrable $v(t)$ on E and $\varepsilon > 0$, we can find a continuous function $g(t)$ on E such that

$$\int_E |v(t) - g(t)|\,dt < \varepsilon/2.$$

Since g is uniformly continuous on E, there exists a constant $\delta > 0$ such that

$$2\mu E|g(t) - g(s)| < \varepsilon$$

for all $t, s \in E$ satisfying $|t - s| < \delta$. Then for all $n > 2/\delta$ and all $k \in \mathbb{N}$, $t, s \in E_{n,k} \cup F_{n,k}$ implies $|t - s| < 2/n$. Hence,

$$\Big|\int_E v(t)[\chi_{E_n}(t) - \chi_{F_n}(t)]\,dt\Big| \le \int_E |v(t) - g(t)|\,dt + \Big|\int_{E_n} g(t)\,dt - \int_{F_n} g(t)\,dt\Big|$$
$$< \frac{\varepsilon}{2} + \sum_{k=1}^{\infty}\Big|\int_{E_{n,k}} g(t)\,dt - \int_{F_{n,k}} g(t)\,dt\Big| < \varepsilon/2 + \varepsilon/2 = \varepsilon. \ \blacksquare$$

THEOREM 3.13. *Let $X = L_M^o$ or L_M.*

(i) *If $M \notin \Delta_2$, then $B(X)$ has no H-point.*

(ii) *If $M \in \Delta_2$, then $x \in S(X)$ is an H-point of $B(X)$ iff it is an extreme point.*

Proof. We only consider the case $X = L_M^o$.

(i) Suppose $x \in B(L_M^o)$ and $k \in K(x)$. Pick a nonnull set $E \in \Sigma$ such that $|x(t)| \le c$ on E. If $M \notin \Delta_2$, then there exist $u_n\uparrow$ and subsets E_n of E such that

$$M((1 + 1/n)u_n) > 2^n M(u_n), \qquad M(u_n)\mu E_n = 2^{-n} \quad (n \in \mathbb{N}).$$

Define

$$x_n = x|_{G\setminus E_n} + k^{-1}u_n\chi_{E_n}.$$

Then $\liminf_n \|x_n\|^o \ge \|x\|^o$ since $x(t)$ is bounded on E and $\mu E_n \to 0$. On the other hand, from

$$\|x_n\|^o \le k^{-1}[1 + \varrho_M(kx_n)] = k^{-1}[1 + \varrho_M(kx|_{G\setminus E_n}) + M(u_n)\mu E_n]$$
$$\le \|x\|^o + k^{-1}2^{-n} \to \|x\|^o$$

we deduce that $\|x_n\|^o \to \|x\|^o = 1$.

Next, we show that $x_n \to x$ weakly. Indeed, let $f = v + \varphi \in L_M^*$, where $v \in L_N$ and $\varphi \in F$. Since $x_n - x = k^{-1}u_n\chi_{E_n} - x|_{E_n} \in E_M$, we find that

$$\langle f, x_n - x\rangle = \int_{E_n} k^{-1}u_n v(t)\,dt - \int_{E_n} x(t)v(t)\,dt.$$

Pick $\varepsilon > 0$ such that $\varrho_N(\varepsilon v) < \infty$. Then by the Young Inequality,

$$|\langle f, x_n - x\rangle| \le \varepsilon^{-1}k^{-1}[M(u_n)\mu E_n + \varrho_N(\varepsilon v|_{E_n})] + \varepsilon^{-1}[M(c)\mu E_n + \varrho_N(\varepsilon v|_{E_n})] \to 0$$

$(n \to \infty)$. This shows that $x_n \to x$ weakly. But it is obvious that

$$\lim_n k\|x_n - x\|^o = \lim_n \|u_n\chi_{E_n}\|^o = \lim_n \|u_n\chi_{E_n}\| = 1,$$

so we find that x is not an H-point of $B(L_M^o)$.

(ii) $\Rightarrow$ Assume $x \in S(L_M^o)$. If x is not an extreme point of $B(L_M^o)$, then there exists $k \in K(x)$ such that $\mu\{t \in G : kx(t) \in \mathbb{R} \setminus S_M\} > 0$. Hence, we can find a SAI $[a, b]$ of M and $\delta > 0$ such that

$$E = \{t \in G : kx(t) \in [a + \delta, b - \delta]\}$$

is not a null set. Without loss of generality, we may assume that E is a closed set. Let E_n, F_n be as in Lemma 3.12, and define

$$x_n = x + \delta k^{-1}\chi_{E_n} - \delta k^{-1}\chi_{F_n}.$$

Then by the affinity of M on $[a,b]$, it is easily verified that

$$\|x_n\|^o \le k^{-1}[1+\varrho_M(kx_n)] = k^{-1}[1+\varrho_M(kx)] = \|x\|^o = 1$$

and $\|x_n - x\|^o = \delta k^{-1}\|\chi_E\|^o > 0$. But for any $f = v+\varphi \in L_M^*$, where $v \in L_N$ and $\varphi \in F$,

$$\langle f, x_n - x\rangle = \delta k^{-1}\int_E v(t)[\chi_{E_n} - \chi_{F_n}]\,dt \to 0.$$

This shows that x is not an H-point of $B(L_M^o)$.

$\Leftarrow$ Suppose that $M \in \Delta_2$, $x \in \operatorname{Ext} B(L_M^o)$ and $x_n \in S(L_M^o)$ such that $x_n \to x$ weakly. We should show $x_n \to x$ in norm. By Theorem 1.41, it suffices to show that $x_n \to x$ in measure and $k_n \to k$, where $k_n \in K(x_n)$ and $k \in K(x)$ (this implies $\varrho_M(k_n x_n) = k_n - 1 \to k - 1 = \varrho_M(kx)$).

First we have $k_0 = \sup\{k_n : n \in \mathbb{N}\} < \infty$ by Lemmas 2.31 and 2.45.

Next we claim that

$$\lim_{m\to\infty}\sup_n \mu\{t \in G : |k_n x_n(t)| \ge m\} = 0 \tag{3.33}$$

and

$$\lim_{\mu e\to 0}\sup_n \varrho_M(k_n x_n|_e) = 0. \tag{3.34}$$

Indeed, (3.33) follows immediately from

$$1 > k_n^{-1}\varrho_M(k_n x_n) \ge k_n^{-1}\int_{G_n(m)} M(k_n x_n(t))\,dt \ge k_0^{-1}M(m)\mu G_n(m),$$

where $G_n(m) = \{t \in G : |k_n x_n(t)| \ge m\}$.

If (3.34) does not hold, then by passing to a subsequence, we may assume

$$\varrho_M(k_n x_n|_{E_n}) \ge \delta > 0, \quad \mu E_n < 2^{-n} \quad (n \in \mathbb{N}).$$

Fix an integer m such that

$$\mu B > \mu G - 2^{-m} \Rightarrow \|x|_B\|^o > 1 - \frac{\delta}{2k_0}$$

and set $E = G \setminus \bigcup_{n\ge m+1} E_n$. Then $\|x|_E\|^o > 1 - \delta/(2k_0)$. It follows that for all $n > m$,

$$1 = \|x_n\|^o > k_n^{-1}[1 + \varrho_M(k_n x_n|_E) + \varrho_M(k_n x_n|_{E_n})] \ge \|x_n|_E\|^o + k_0^{-1}\delta.$$

This is impossible since the weak convergence of $\{x_n|_E\}$ to $x|_E$ implies

$$\liminf_n \|x_n|_E\|^o \ge \|x|_E\|^o > 1 - \frac{\delta}{2k_0}.$$

This contradiction proves (3.34).

Next, we show $k_n \to k$. Since $\{x_n\}$ is given arbitrarily, passing to a subsequence if necessary, we may assume $k_n \to k_0$. Let H be defined as follows: $t \in H$ iff $kx(t) \in \mathbb{R}\setminus[a,b]$ for every SAI $[a,b]$ of M. Then by the proof of Lemma 2.26, $k_n x_n \to kx$ in measure on H. Since $x_n \to x$ weakly, if $x|_H \ne 0$, then $k_n \to k$, and so $x_n \to x$ in measure on H since $\{k_n\}$

is bounded. We shall show that $k_n \to k$ in the case $x|_H = 0$. Indeed, since $x \in \operatorname{Ext} B(L_M^o)$, we have $\mu\{t \in G : kx(t) \in (a,b)\} = 0$ for every SAI $[a,b]$ of M. Therefore, we may assume

$$G = \bigcup_{i=1}^{\infty} G(i), \tag{3.35}$$

where $G(i) = \{t \in G : kx(t) = r_i\}$ and r_i is an extreme point of some SAI of M. Hence, for each $i \in \mathbb{N}$,

$$\lim_n \int_{G(i)} x_n(t)\,dt = \int_{G(i)} x(t)\,dt = r_i k^{-1} \mu G(i)$$

since $x_n \to x$ weakly. Observe that the Jensen Inequality implies

$$\int_{G(i)} M(k_n x_n(t))\,dt \geq M\Big(\frac{1}{\mu G(i)} \int_{G(i)} k_n x_n(t)\,dt\Big)\mu G(i) \to M(k^{-1}k_0 r_i)\mu G(i),$$

and by (3.35),

$$\begin{aligned} 1 &= \|x_n\|^o = k_n^{-1}\Big[1 + \sum_{i\in\mathbb{N}} \varrho_M(k_n x_n|_{G(i)})\Big] \\ &\geq k_n^{-1}\Big[1 + \sum_{i\in\mathbb{N}} M\Big(\frac{1}{\mu G(i)} \int_{G(i)} k_n x_n(t)\,dt\Big)\mu G(i)\Big] \\ &\to k_0^{-1}\Big[1 + \sum_{i\in\mathbb{N}} M(k^{-1}k_0 r_i)\mu G(i)\Big] = k_0^{-1}[1 + \varrho_M(k_0 x)] \geq \|x\|^o = 1. \end{aligned}$$

Taking account of the fact that $x \in \operatorname{Ext} B(L_M^o)$ implies $K(x) = \{k\}$, we conclude $k_n \to k_0 = k$.

To complete the proof, it remains to check that $x_n \to x$ in measure on $G \setminus H$, or equivalently, $x_n \to x$ in measure on each $G(i)$. For this purpose, we consider the following three cases.

I. r_i is a right extreme point of a SAI of M but it is not a left extreme point of any SAI of M. We first claim that

$$\int_{I_n} [x_n(t) - x(t)]\,dt \to 0 \qquad (n \to \infty), \tag{3.36}$$

where $I_n = \{t \in G(i) : x_n(t) \geq x(t)\}$. In fact, if (3.36) is not true, then applying (3.33), (3.34), $k_n \to k$, and using the same method as in the proof of Lemma 2.26, we can derive $\limsup_n \|x_n + x\|^o < 2$, which contradicts the assumption that $x_n \to x$ weakly. Hence, taking into account that $x_n \to x$ weakly implies

$$\int_{G(i)} [x_n(t) - x(t)]\,dt \to 0,$$

we find

$$\int_{G(i)\setminus I_n} [x_n(t) - x(t)]\,dt \to 0 \qquad (n \to \infty).$$

Consequently, by the definition of I_n,

$$\int_{G(i)} |x_n(t) - x(t)|\, dt \to 0 \qquad (n \to \infty).$$

This shows that $x_n \to x$ in measure on $G(i)$.

II. r_i is a left extreme point of a SAI of M but it is not a right extreme point of any SAI of M. Symmetrically, in this case, we can show that $x_n \to x$ in measure on $G(i)$.

III. If neither I nor II holds, then r_i is an extreme point of two different SAIs of M, and thus $p_-(r_i) < p(r_i)$, where, without loss of generality, we assume $r_i > 0$.

Since $M \in \Delta_2$, we may find $v \in L_N$ with $\varrho_N(v) = 1$ such that $\langle v, x\rangle = 1$. Furthermore, by Proposition 1.83, we may assume $v(t) = \beta$ on $G(i)$. Then, by Theorem 1.80, $p_-(r_i) \le \beta \le p(r_i)$. Consequently, either $p_-(r_i) < \beta$ or $\beta < p(r_i)$. First we deal with the case $p(r_i) - \beta = \delta > 0$. Since $x_n \to x$ weakly and $k_n \to k$, Lemma 2.34 implies

$$M(r_i)\mu G(i) = \int_{G(i)} M(kx(t))\, dt = \lim_n \int_{G(i)} M(k_n x_n(t))\, dt.$$

Hence, by (1.9) and the weak convergence of $\{k_n x_n\}$ to kx,

$$\lim_n \int_{G(i)} [N(\beta) + M(k_n x_n(t)) - \beta k_n x_n(t)]\, dt = \int_{G(i)} [N(\beta) + M(r_i) - \beta r_i]\, dt = 0.$$

Noticing that the integrand in the first term is nonnegative, we find

$$\lim_n \int_{Q_n} [N(\beta) + M(k_n x_n(t)) - \beta k_n x_n(t)]\, dt = 0 \tag{3.37}$$

for arbitrary subsets $Q_n \in \Sigma$ of $G(i)$. In particular, this holds for $Q_n = \{t \in G(i) : k_n x_n(t) \ge r_i\}$. But $k_n x_n(t) - r_i \ge \alpha > 0$ implies

$$N(\beta) + M(k_n x_n(t)) - \beta k_n x_n(t) \ge [k_n x_n(t) - r_i][p(r_i) - \beta] \ge \alpha\delta > 0$$

(see Graph 1.1, p. 8), and in view of (3.33) and (3.34), we conclude

$$\int_{Q_n} [k_n x_n(t) - r_i]\, dt \to 0 \qquad (n \to \infty).$$

Consequently, the weak convergence of $\{k_n x_n\}$ to kx on $G(i)$ implies

$$\int_{G(i)\setminus Q_n} [k_n x_n(t) - r_i]\, dt \to 0 \qquad (n \to \infty).$$

Summing up the above discussion, we get

$$\int_{G(i)} |k_n x_n(t) - kx(t)|\, dt \to 0,$$

whence $x_n \to x$ in measure on $G(i)$. Similarly, if $\beta - p_-(r_i) > 0$, we also have the same conclusion. This ends the proof of the theorem. ∎

Theorem 3.13 yields the following theorem:

THEOREM 3.14. *L_M^o or L_M has the H-property iff $M \in \Delta_2$ and M is strictly convex.*

THEOREM 3.15. *Let $X = L_M$ or L_M^o. Then the following are equivalent*:

(i) *X is uniformly rotund.*
(ii) *X is nearly uniformly convex.*
(iii) *X has the uniform Klee–Kadec property.*

Proof. It suffices to verify (iii)⇒(i). We first consider $X = L_M$. Since UKK ⇒ H-property, by Theorem 3.14, $M \in \Delta_2$ and M is strictly convex. If M is not uniformly convex, then there exists $\varepsilon > 0$ such that for any $\delta > 0$, we can find $u, v > 0$ such that $u > v > 0$, $M(v)\mu G \geq 1$, $u - v \geq \varepsilon u$ and

$$M\left(\frac{u+v}{2}\right) > (1-\delta)\frac{M(u)+M(v)}{2}.$$

For the arbitrary $\delta > 0$, we have to construct a sequence $\{x_n\}_{n\geq 0}$ in $B(L_M)$ satisfying $x_n \to x_0$ weakly, $\|x_m - x_n\| \geq \varepsilon/2$ and $\|x_0\| \geq 1-\delta$.

Since there exists a measure preserving transformation from (G, Σ, μ) to $[0, \mu G]$ with the usual Lebesgue measure, we may assume $G = [0, \mu G]$. Let $M(u)+M(v) = 2/d$. Then since $M(v)\mu G > 1$, we have $0 < d < \mu G$. Set, for each $n \in \mathbb{N}$,

$$E_n = \bigcup_{j=1}^{2^{n-1}} \left\{\left[\frac{2j-2}{2^n}d, \frac{2j-1}{2^n}d\right)\right\}, \qquad F_n = \bigcup_{j=1}^{2^{n-1}} \left\{\left[\frac{2j-1}{2^n}d, \frac{2j}{2^n}d\right)\right\}$$

and define

$$x_0 = \frac{u+v}{2}\chi_{[0,d)}, \qquad x_n = u\chi_{E_n} + v\chi_{F_n}.$$

Then by the proof of Theorem 3.13, $x_n \to x_0$ weakly. Moreover, since

$$\begin{aligned}\varrho_M\left(\frac{2}{\varepsilon}(x_n - x_m)\right) &= M\left(\frac{2}{\varepsilon}(u-v)\right)\frac{d}{2} \geq M\left(\frac{u-v}{\varepsilon}\right)d \\ &\geq M(u)d > \frac{d}{2}[M(u)+M(v)] = 1 \qquad (n \neq m),\end{aligned}$$

we deduce that $\|x_n - x_m\| > \varepsilon/2$ $(n \neq m)$. But

$$\varrho_M(x_0) = dM\left(\frac{u+v}{2}\right) > (1-\delta)d\frac{M(u)+M(v)}{2} = 1-\delta$$

implies $\|x_0\| > 1-\delta$, and we conclude that L_M is not NUC.

Next we consider $X = L_M^o$. Suppose that M is not uniformly convex. Then by Theorem 3.14 and Lemma 1.17, there exists $\varepsilon \in (0,1)$ such that for any $\delta \in (0,1)$, we can find $u > 0$ satisfying $N(p(u))\mu G > 2$ and

$$p((1+\varepsilon)u) < (1+\delta)p(u).$$

Let

$$N(p((1+\varepsilon)u)) + N(p(u)) = 2/d.$$

Then $2/d \geq 2N(p(u))$, and so $N^{-1}(2/d) > p(u)$. Define

$$k = \frac{d}{2}[up(u) + (1+\varepsilon)up((1+\varepsilon)u)]$$

and let E_n, F_n be constructed as in the first part of the proof. Then, similarly, we have $x_n \to x_0$ weakly, where

$$x_0 = \frac{u}{k}\left(1+\frac{\varepsilon}{2}\right)\chi_{[0,d)}, \qquad x_n = \frac{u}{k}\{(1+\varepsilon)\chi_{E_n} + \chi_{F_n}\}.$$

Observing that $\int_0^{\mu G} N(p(kx_n(t)))\,dt = 1$, we deduce

$$\|x_n\|^o = \langle p(kx_n), x_n\rangle = \frac{u}{k}[(1+\varepsilon)p((1+\varepsilon)u) + p(u)]\frac{d}{2} = 1.$$

Moreover, by Example 1.22,

$$\begin{aligned}\|x_n - x_m\|^o &= \frac{\varepsilon u}{k}\|\chi_{[0,d/2)}\|^o = \frac{\varepsilon u}{k}\cdot\frac{d}{2}N^{-1}(2/d) = \frac{\varepsilon N^{-1}(2/d)}{p(u)+(1+\varepsilon)p((1+\varepsilon)u)}\\ &> \frac{\varepsilon p(u)}{2(1+\varepsilon)p((1+\varepsilon)u)} > \frac{\varepsilon}{2(1+\varepsilon)(1+\delta)} > \frac{\varepsilon}{8}.\end{aligned}$$

Finally, we estimate the norm of x_0. To this end, we define

$$v = p((1+\varepsilon)u)\chi_{[0,d/2)} + \frac{1}{1+\delta}p((1+\varepsilon)u)\chi_{[d/2,d)}.$$

Then $\varrho_N(v) \le \frac{d}{2}[N(p((1+\varepsilon)u)) + N(p(u))] \le 1$. Hence,

$$\begin{aligned}\|x_n\|^o \ge \langle v, x_0\rangle &= \frac{d}{2k}\left[(1+\varepsilon/2)up((1+\varepsilon)u) + (1+\varepsilon/2)u\frac{1}{1+\delta}p((1+\varepsilon)u)\right]\\ &\ge \frac{d}{2k(1+\delta)}[(1+\varepsilon)up((1+\varepsilon)u) + up(u)] = \frac{1}{1+\delta}.\end{aligned}$$

Since $\delta > 0$ is arbitrary, we conclude that L_M^o is not NUC. ∎

Now, we consider Orlicz sequence spaces. First, by the same method, we can prove the following theorem.

THEOREM 3.16. *If $M \notin \Delta_2$, then $B(l_M)$ and $B(l_M^o)$ have no H-point.*

THEOREM 3.17. *Let $X = l_M$ or l_M^o. The following are equivalent*:

(i) *X has the uniform Klee–Kadec property.*
(ii) *X has the H-property.*
(iii) *$M \in \Delta_2$.*

Proof. Only (iii)⇒(i) remains to be verified. We first take $X = l_M$. Since $M \in \Delta_2$, for any given $\varepsilon > 0$, by Theorem 1.39, there exists $\beta > 0$ such that

$$\|x\| \ge \varepsilon/4 \Rightarrow \varrho_M(x) \ge \beta.$$

For this $\beta > 0$, again by Theorem 1.30, we can find $\delta \in (0,1)$ such that

$$\|x\| \ge 1-\delta \Rightarrow \varrho_M(x) \ge 1-\beta.$$

Now, suppose $x_n \in B(l_M), x_n \to x$ weakly and $\|x_n - x_m\| \ge \varepsilon$ $(n \ne m)$. We shall show $\|x\| \le 1-\delta$, proving (i). Indeed, if $\|x\| > 1-\delta$, then we can select a finite subset I of $\mathbb{N}$ such that $\|x|_I\| > 1-\delta$. Since the weak convergence of $\{x_n\}$ to x implies that $x_n \to x$ coordinatewise, we deduce that $x_n \to x$ uniformly on I since I is finite. Consequently,

there exists $k \in \mathbb{N}$ such that

$$\|x_n|_I\| > 1-\delta, \qquad \|(x_n - x_m)|_I\| \le \varepsilon/2$$

for all $n, m > k$. But the first inequality implies

$$\varrho_M(x_n|_I) > 1-\beta \qquad (n > k)$$

while the second one implies

$$\|(x_n - x_m)|_{\mathbb{N}\setminus I}\| \ge \varepsilon/2 \qquad (m, n > k,\ m \ne n)$$

(since $\|x_n - x_m\| \ge \varepsilon$), which yields $\|x_n|_{\mathbb{N}\setminus I}\| \ge \varepsilon/4$ or $\|x_m|_{\mathbb{N}\setminus I}\| \ge \varepsilon/4$. Say $\|x_n|_{\mathbb{N}\setminus I}\| \ge \varepsilon/4$. Then $\varrho_M(x_n|_{\mathbb{N}\setminus I}) \ge \beta$. This is impossible since

$$\varrho_M(x_n|_I) + \varrho_M(x_n|_{\mathbb{N}\setminus I}) = \varrho_M(x_n) \le 1.$$

Next we prove (iii)⇒(i) for $X = l_M^o$. For fixed $\varepsilon > 0$, by Theorem 1.39, there exists $\beta \in (0,1)$ such that $\|x\| \ge \varepsilon/8$ implies $\varrho_M(x) \ge 2\beta$. Given $x_n \in B(l_M^o)$, $x_n \to x$ weakly and $\|x_n - x_m\|^o \ge \varepsilon$ $(n \ne m)$, we shall complete the proof by showing $\|x\|^o \le 1-\beta$. Indeed, if $x = 0$, then we have nothing to show. So, we assume $x \ne 0$. In this case, by Lemma 2.31, $\{k_n\}$ is bounded, where $k_n \in K(x_n)$. Passing to a subsequence if necessary, we may assume $k_n \to k$. Next, we pick a finite subset I of $\mathbb{N}$ such that $\|x|_I\|^o \ge \|x\|^o - \beta$. Since $x_n \to x$ uniformly on I, by the first part of the proof, there are infinitely many $n \in \mathbb{N}$ such that $\|x_n|_{\mathbb{N}\setminus I}\|^o \ge \varepsilon/4$. This implies $\|x_n|_{\mathbb{N}\setminus I}\| \ge \varepsilon/8$ by Theorem 1.38. Hence, $\varrho_M(x_n|_{\mathbb{N}\setminus I}) \ge 2\beta$. Taking account of (1.6) and the fact that $\|x_n\|^o \le 1$ implies $k_n > 1$ for infinitely many $n \in \mathbb{N}$, we have

$$\begin{aligned} 1 - 2\beta &\ge \|x_n\|^o - \varrho_M(x_n|_{\mathbb{N}\setminus I}) \ge \|x_n\|^o - k_n^{-1}\varrho_M(k_n x_n|_{\mathbb{N}\setminus I}) \\ &= k_n^{-1}[1 + \varrho_M(k_n x_n|_I)] \to k^{-1}[\varrho_M(kx|_I)] \ge \|x|_I\|^o \ge \|x\|^o - \beta. \ \blacksquare \end{aligned}$$

COROLLARY 3.18. *l_M or l_M^o is nearly uniformly convex iff it is reflexive.*

Proof. Since X is NUC iff X is reflexive and it has the UKK property, the conclusion follows from Theorem 3.17. ■

To end this section, we give several corollaries. First we introduce some new concepts. Let X be a Banach space and K be a closed bounded convex subset of X. A point in the boundary of K is called a *denting point* of K if for every $\varepsilon > 0$, $x \notin \overline{\mathrm{co}}\{K \setminus (x + \varepsilon B(X))\}$. If every point in $S(X)$ is a denting point of $B(X)$, then X is said to have the *G property*. It is known that (i) x is a denting point of K iff x is both an H-point of K and an extreme point of K, and (ii) X has the G property iff X is rotund and has the K property, where *K property* means that the weak topology and norm topology on $S(X)$ are equivalent. T. Wang [220] shows that each of L_M, L_M^o, l_M and l_M^o has the K property iff it has the H-property.

COROLLARY 3.19. *Let $X = L_M$ or L_M^o and $x \in S(X)$. Then the following are equivalent*:

(i) *x is a denting point of $B(X)$.*
(ii) *x is an H-point of $B(X)$.*
(iii) *x is a strongly extreme point of $B(X)$.*

(iv) *x is an extreme point of $B(X)$ and $M \in \Delta_2$.*

COROLLARY 3.20. *Let $X = l_M$ or l_M^o and $x \in S(X)$. Then the following are equivalent*:

(i) *x is a denting point of $B(X)$.*
(ii) *x is a strongly extreme point of $B(X)$.*
(iii) *x is an extreme point of $B(X)$ and $M \in \Delta_2$.*

COROLLARY 3.21. (i) *L_M or L_M^o has the G property iff it has the H-property, or equivalently, it is mid-point locally uniformly rotund.*

(ii) *l_M or l_M^o has the G property iff it is mid-point locally uniformly rotund.*

3.3. Nonsquareness. Consider a Banach space X. A point $x \in S(X)$ is called a *nonsquare point* (N-SP) if for any $y \in S(X)$,

$$\max\{\|x+y\|, \|x-y\|\} > 1.$$

$x \in S(X)$ is called a *uniformly nonsquare point* (UN-SP) provided that there exists $\delta > 0$ such that for all $y \in S(X)$,

$$\max\{\|x+y\|, \|x-y\|\} \geq 1+\delta.$$

If each point in $S(X)$ is an N-SP (a UN-SP), then X is called a *nonsquare* (N-S) (resp. *locally uniformly nonsquare*, LUN-S) space. Moreover, if there exists $\delta > 0$ such that

$$\max\{\|x+y\|, \|x-y\|\} \geq 1+\delta$$

for all $x, y \in S(X)$, then X is said to be *uniformly nonsquare* (UN-S). Let $n \geq 2$ be an integer. A point $x \in S(X)$ is called a *non-l_n^1 point* (N-l_n^1P) if for any $x_2, \ldots, x_n \in S(X)$,

$$\min\{\|x+\varepsilon_2 x_2+\ldots+\varepsilon_n x_n\| : \varepsilon_i = \pm 1,\ i = 2, \ldots, n\} < n.$$

A point $x \in S(X)$ is called a *uniformly non-l_n^1 point* (UN-l_n^1P) if there exists $\delta > 0$ such that for any $x_2, \ldots, x_n \in S(X)$,

$$\min\{\|x+\varepsilon_2 x_2+\ldots+\varepsilon_n x_n\| : \varepsilon_i = \pm 1,\ i = 2, \ldots, n\} \leq n-\delta.$$

If each point in $S(X)$ is an N-l_n^1P (a UN-l_n^1P), then X is called a *non-l_n^1* (N-l_n^1) (*locally uniformly non-l_n^1*, LUN-l_n^1) space. If moreover, there exists $\delta > 0$ such that for all $x_1, \ldots, x_n \in S(X)$,

$$\min\{\|x_1+\varepsilon_2 x_2+\ldots+\varepsilon_n x_n\| : \varepsilon_i = \pm 1, i = 2, \ldots, n\} \leq n-\delta,$$

then X is said to be *uniformly non-l_n^1* (UN-l_n^1) . If X is UN-l_n^1 for some $n \geq 2$, then it is called a *B-convex space*.

From the definitions, it is easily deduced that N-S $\Leftrightarrow$ N-l_2^1 and UN-S $\Leftrightarrow$ UN-l_2^1. But one will see that LUN-S and LUN-l_2^1 are not equivalent.

Now, we consider the nonsquareness of Orlicz spaces. Since all the proofs for Orlicz sequence spaces are similar to those for function spaces in this section, we only present proofs for Orlicz function spaces.

LEMMA 3.22. (i) *Suppose $\varrho_M(x_n) \to 1$, $\varrho_M(y_n) \to 1$ and $\varrho_M(x_n \pm y_n) \to 1$. Then $\varrho_M(|x_n| - |y_n|) \to 0$ $(n \to \infty)$.*

(ii) *Let* $x_n, y_n \in S(L_M^o)$ *satisfy* $\|x_n \pm y_n\|^o \to 1$. *Then*

$$\frac{k_n+h_n}{k_nh_n}\varrho_M\left(\frac{k_nh_n}{k_n+h_n}(|x_n|-|y_n|)\right) \to 0 \qquad (n\to\infty),$$

where $k_n \in K(x_n+y_n), h_n \in K(x_n-y_n), n\in\mathbb{N}$.

Proof. (i) Since by the convexity of M, for each $n\in\mathbb{N}$ and $t\in G$,

$$g_n(t) = 2^{-1}[M(x_n(t)+y_n(t)) + M(x_n(t)-y_n(t))] \ge \max\{M(x_n(t)), M(y_n(t))\},$$

we derive

$$1 \leftarrow \varrho_M(x_n) \le \int_G g_n(t)\,dt \to 1, \qquad 1 \leftarrow \varrho_M(y_n) \le \int_G g_n(t)\,dt \to 1.$$

Observing that the Orlicz function M has the property $M(|u|-|v|) \le |M(u)-M(v)|$ (see Graph 1.1, p. 8), we deduce that

$$\begin{aligned}\varrho_M(|x_n|-|y_n|) &\le \int_G |M(x_n(t)) - M(y_n(t))|\,dt\\ &\le \int_G [g_n(t)-M(x_n(t))]\,dt + \int_G [g_n(t)-M(y_n(t))]\,dt \to 0 \qquad (n\to\infty).\end{aligned}$$

(ii) By Theorem 1.30 and the convexity of M,

$$\begin{aligned}2 &\leftarrow \|x_n+y_n\|^o + \|x_n-y_n\|^o\\ &= \frac{k_n+h_n}{k_nh_n}\left[1+\frac{h_n}{k_n+h_n}\varrho_M(k_n(x_n+y_n)) + \frac{k_n}{k_n+h_n}\varrho_M(h_n(x_n-y_n))\right]\\ &\ge \begin{cases}\dfrac{k_n+h_n}{k_nh_n}\left[1+\varrho_M\left(\dfrac{k_nh_n}{k_n+h_n}2x_n\right)\right] \ge 2\|x_n\|^o = 2,\\ \dfrac{k_n+h_n}{k_nh_n}\left[1+\varrho_M\left(\dfrac{k_nh_n}{k_n+h_n}2y_n\right)\right] \ge 2\|y_n\|^o = 2.\end{cases}\end{aligned}$$

Similarly to (i), we compute

$$\begin{aligned}&\frac{k_n+h_n}{k_nh_n}\varrho_M\left(\frac{k_nh_n}{k_n+h_n}(|x_n|-|y_n|)\right)\\ &\quad\le \frac{k_n+h_n}{k_nh_n}\int_G\left|M\left(\frac{k_nh_n}{k_n+h_n}2x_n(t)\right) - M\left(\frac{k_nh_n}{k_n+h_n}2y_n(t)\right)\right|dt \to 0 \qquad (n\to\infty). \ \blacksquare\end{aligned}$$

THEOREM 3.23. *Let* $X = L_M, L_M^o,\ l_M$ *or* l_M^o. *Then the following are equivalent*:

(1) X *is uniformly nonsquare.*
(2) X *is uniformly non-*l_n^1 $(n\ge 2)$.
(3) X *is a* B*-convex space.*
(4) X *is reflexive.*

Proof. Only (3)⇒(4) and (4)⇒(1) remain to be proved. Since it is well known that a B-convex Banach space contains no subspace isomorphic to c_0 or l^1, (3)⇒(4) follows from Corollary 1.95.

(4)⇒(1). First we deal with $X = L_M$. If (1) fails, then there exist $x_n, y_n \in S(L_M)$ satisfying

$$\max\{\|x_n + y_n\|, \|x_n - y_n\|\} \to 1 \qquad (n \to \infty),$$

i.e., $\|x_n + y_n\| \to 1$ and $\|x_n - y_n\| \to 1$ $(n \to \infty)$. It follows from Lemma 3.22 and the condition $M \in \Delta_2$ that $\varrho_M(|x_n| - |y_n|) \to 0$ $(n \to \infty)$. Hence, from Lemma 1.40 and

$$\varrho_M(2x_n) = \varrho_M(|x_n| + |y_n| + |x_n| - |y_n|),$$

we deduce that $\lim_n[\varrho_M(2x_n) - \varrho_M(|x_n| + |y_n|)] = 0$. Consequently,

$$2 = \lim_n[\varrho_M(x_n + y_n) + \varrho_M(x_n - y_n)] \geq \limsup_n \varrho_M(|x_n| + |y_n|) = \limsup_n \varrho_M(2x_n).$$

This cannot be true since $M \in \nabla_2$ implies that there exists $\delta > 0$ such that

$$M(2u) > (2 + \delta)M(u) \qquad (u \geq \beta),$$

where $\beta > 0$ satisfies $M(\beta)\mu G = 1 - \alpha < 1$, and so,

$$\begin{aligned}
\varrho_M(2x_n) &= \int_{E_n} M(2x_n(t))\,dt + \int_{G\setminus E_n} M(2x_n(t))\,dt \\
&\geq (2+\delta)\int_{E_n} M(x_n(t))\,dt + 2\int_{G\setminus E_n} M(x_n(t))\,dt \\
&= 2\varrho_M(x_n) + \delta\int_{E_n} M(x_n(t))\,dt \\
&\geq 2 + 2^{-1}\delta\alpha,
\end{aligned}$$

where $E_n = \{t \in G : |x_n(t)| \geq \beta\}$, and the last inequality holds because

$$\begin{aligned}
\int_{E_n} M(x_n(t))\,dt &= \varrho_M(x_n) - \int_{G\setminus E_n} M(x_n(t))\,dt \\
&\geq 1 - M(\beta)\mu(G \setminus E_n) \geq \alpha.
\end{aligned}$$

Next we turn to the case $X = L_M^o$. If L_M^o is not uniformly nonsquare, then there exist $x_n, y_n \in S(L_M^o)$ such that

$$\|x_n + y_n\|^o \to 1, \quad \|x_n - y_n\|^o \to 1 \quad (n \to \infty).$$

Let $k_n \in K(x_n + y_n)$ and $h_n \in K(x_n - y_n)$. Without loss of generality, we may assume $k_n \leq h_n$ and $k_n \to k$, $h_n \to h$ $(n \to \infty)$. Clearly, by Theorems 1.31, 1.35, and since $M \in \nabla_2$, we have $1 \leq k \leq h < \infty$. Hence, by Lemma 3.22, $\varrho_M(k_n(|x_n| - |y_n|)) \to 0$ $(n \to \infty)$, and thus Lemma 1.40 implies

$$\begin{aligned}
&\varrho_M(2k_nx_n) - \varrho_M(k_n(|x_n| - |y_n|)) \\
&\qquad = \varrho_M(2k_nx_n) - \varrho_M(k_n(2|x_n| + |y_n| - |x_n|)) \to 0 \qquad (n \to \infty).
\end{aligned}$$

Consequently, if we set $G_n = \{t \in G : x_n(t)y_n(t) \geq 0\}$, then by the monotonicity of $M(u)/u$, we derive a contradiction:

$$\begin{aligned}
2 &= \lim_n(\|x_n + y_n\|^o + \|x_n + y_n\|^o) \\
&\geq \limsup_n\{k_n^{-1}[1 + \varrho_M(k_n(|x_n| + |y_n|)|_{G_n})] \\
&\quad + h_n^{-1}[1 + \varrho_M(k_n(|x_n| + |y_n|)|_{G\setminus G_n})]\} \\
&\geq \limsup_n\{h^{-1} + k_n^{-1}[1 + \varrho_M(2k_nx_n)]\} = h^{-1} + 2 > 2. \ \blacksquare
\end{aligned}$$

THEOREM 3.24. *Let $x \in S(L_M)$ or $S(l_M)$. Then x is a nonsquare point iff $\varrho_M(x) = 1$. Therefore, E_M and h_M are nonsquare.*

Proof. $\Rightarrow$ Pick $c > 0$ such that $E = \{t \in G : |x(t)| \le c\}$ is not a null set. If $\varrho_M(x) = 1 - \delta < 1$, then clearly, $M \notin \Delta_2$. Hence, there exist $u_n > 2nc$ and disjoint subsets $\{E_n\}$ of E such that

$$M\Big(\Big(1+\frac{1}{n}\Big)u_n\Big) > 2^n M\Big(\Big(1+\frac{1}{2n}\Big)u_n\Big), \qquad M\Big(\Big(1+\frac{1}{2n}\Big)u_n\Big)\mu E_n = 2^{-n}\delta.$$

Therefore, if we define $y = \sum_{n=1}^{\infty} u_n \chi_{E_n}$, then as in Example 1.19, we verify that $\|y\| = 1$ and

$$\begin{aligned}\varrho_M(y) &= \sum_{n=1}^{\infty} M(u_n)\mu E_n < \sum_{n=1}^{\infty} M(u_n + c)\mu E_n \\ &< \sum_{n=1}^{\infty} M\Big(\Big(1+\frac{1}{2n}\Big)u_n\Big)\mu E_n = \delta.\end{aligned}$$

This yields

$$\varrho_M(x+y) < \varrho_M(x) + \sum_{n=1}^{\infty} M(u_n + c)\mu E_n = 1 - \delta + \delta = 1.$$

Hence, $\|x+y\| \le 1$. But $\|x+y\| + \|x-y\| \ge \|2x\| = 2$, and we deduce that $\|x+y\| = \|x-y\| = 1$, i.e., x is not a NSP.

$\Leftarrow$ Suppose that $S(L_M)$ has an element y satisfying $\|x+y\| = \|x-y\| = 1$. Then since

$$1 = \varrho_M(x) = \varrho_M\Big(\frac{x+y+x-y}{2}\Big) \le \frac{1}{2}[\varrho_M(x+y) + \varrho_M(x-y)] \le 1,$$

we find that for μ-a.e. $t \in G$, $x(t) + y(t)$ and $x(t) - y(t)$ have the same sign since they are in the same SAI of M, and thus, $|x(t)| \ge |y(t)|$ μ-a.e. on G. Consequently,

$$2|y(t)| \le \max\{|x(t) + y(t)|, |x(t) - y(t)|\}$$

μ-a.e. on G. Recalling that $M(2u) > 2M(u)$ for all $u \ne 0$, we conclude that

$$2\varrho_M(y) < \varrho_M(2y) \le \varrho_M(x+y) + \varrho_M(x-y) \le 2.$$

But this cannot be true since it implies $\varrho_M(y) < 1$ and so, since $\|y\| = 1$, we have $\varrho_M(2y) = \infty$. ∎

THEOREM 3.25. *Let $X = L_M$ or l_M. Then the following are equivalent*:

(i) *X is locally uniformly nonsquare.*
(ii) *X is nonsquare.*
(iii) *$S(X)$ has a uniformly nonsquare point.*
(iv) *$M \in \Delta_2$.*

Proof. The equivalence of (ii) and (iv) follows from Theorem 3.24. So, we only need to show (iii)$\Rightarrow$(iv) and (iv)$\Rightarrow$(i).

(iii)⇒(iv). For given $x \in S(L_M)$, pick $c > 0$ such that $E = \{t \in G : |x(t)| \le c\}$ is a nonnull set. If $M \notin \Delta_2$, then there exist $u_n > 2nc$ and a subset $E_n \in \Sigma$ of E such that

$$M\left(\left(1+\frac{1}{n}\right)u_n\right) > 2^n M\left(\left(1+\frac{1}{2n}\right)u_n\right), \qquad M\left(\left(1+\frac{1}{2n}\right)u_n\right)\mu E_n = 2^{-n}$$

($n \in \mathbb{N}$). Set $y_n = u_n \chi_{E_n}$. Then $\varrho_M(y_n) = M(u_n)\mu E_n < 2^{-n} < 1$ and

$$\varrho_M\left(\left(1+\frac{1}{n}\right)y_n\right) = M\left(\left(1+\frac{1}{n}\right)u_n\right)\mu E_n > 2^n M\left(\left(1+\frac{1}{2n}\right)u_n\right)\mu E_n = 1.$$

Hence, $1 \ge \|y_n\| \ge (1+1/n)^{-1} \to 1$ $(n \to \infty)$. Moreover, as in the proof of Theorem 3.24, we can show that

$$\varrho_M(x \pm y_n) \le \varrho_M(x) + M(u_n + c)\mu E_n \le 1 + 2^{-n}$$

and hence, by (1.6), $\|x+y_n\| \le 1+2^{-n}$.This inequality and $\|y_n\| \to 1$ imply $\|x \pm y_n\| \to 1$ $(n \to \infty)$, i.e., x is not a UNSP.

(iv)⇒(i). Let $M \in \Delta_2$ and $x \in S(L_M)$. Suppose that there exist $y_n \in S(L_M)$ such that $\|x \pm y_n\| \to 1$ $(n \to \infty)$. Then by the proof of Theorem 3.23, we deduce a contradiction:

$$2 \ge \limsup_n (|x| + |y_n|) = \varrho_M(2x) > 2\varrho_M(x) = 2. \ \blacksquare$$

THEOREM 3.26. *L_M^o and l_M^o are locally uniformly nonsquare.*

Proof. Suppose that there exist $x, y_n \in S(L_M^o)$ such that $\|x \pm y_n\| \to 1$ $(n \to \infty)$. Let $k_n \in K(x+y_n)$ and $h_n \in K(x-y_n)$, $n \in \mathbb{N}$. Then since by the proof of Lemma 3.22,

$$2 = \|2x\|^o \le \frac{k_n + h_n}{k_n h_n}\left[1 + \varrho_M\left(\frac{k_n h_n}{k_n + h_n} 2x\right)\right] \to 2 \qquad (n \to \infty),$$

we find

$$0 \le a = \inf_n \frac{k_n h_n}{k_n + h_n} \le \sup_n \frac{k_n h_n}{k_n + h_n} = b < \infty.$$

Hence, Lemma 3.22 shows that $b^{-1}\varrho_M(a(|x| - |y_n|)) \to 0$ $(n \to \infty)$, and so $|y_n| \to |x|$ in measure.

Replacing y by $-y$ and passing to a subsequence if necessary, we may assume $k_n \le h_n$ $(n \in \mathbb{N})$, $k_n \to k$, $h_n \to h$ and $|y_n(t)| \to |x(t)|$ μ-a.e. on G $(n \to \infty)$. We complete the proof by deducing an absurdity in each of following three cases.

(a) $h = k = \infty$. In this case we immediately have a contradiction:

$$\infty > b \ge \frac{k_n h_n}{k_n + h_n} \to \infty.$$

(b) $k \le h < \infty$. Since $|y_n(t)| \to |x(t)|$ μ-a.e. on G, for each $\varepsilon > 0$, we can find $H = H(\varepsilon) \in \Sigma$ with $\mu(G \setminus H) < \varepsilon$ and $|y_n(t)| \to |x(t)|$ uniformly on H. For the moment, we arbitrarily fix an $n \in \mathbb{N}$ and set

$$E = \{t \in H : x(t)y_n(t) \ge 0\} \qquad F = H \setminus E.$$

By the monotonicity of $M(u)/u$,

$$\begin{aligned}\|x+y_n\|^o + \|x-y_n\|^o &\ge k_n^{-1}[1 + \varrho_M(k_n(x+y_n)|_E)] + h_n^{-1}[1 + \varrho_M(h_n(x-y_n)|_F)] \\ &\ge h_n^{-1} + k_n^{-1}[1 + \varrho_M(k_n(|x| + |y_n|)|_H)] \ge h_n^{-1} + \|(|x| + |y_n|)|_H\|^o.\end{aligned}$$

Letting $n \to \infty$ and then $\varepsilon \to 0$, we find a contradiction: $2 \ge h^{-1} + \|2x\|^o > 2$.

(c) $k < h = \infty$. In this case, by Lemma 2.31, we have $y_n \to x$ in measure. Hence, we may assume $y_n(t) \to x(t)$ μ-a.e. on G, and thus, for each $\varepsilon > 0$, there exists $H = H(\varepsilon) \in \Sigma$ with $\mu(G \setminus H) < \varepsilon$ such that $y_n \to x$ uniformly on H. Therefore, from

$$\|x + y_n\|^o \geq k_n^{-1}[1 + \varrho_M(k_n(x + y_n)|_H)] \geq \|(x + y_n)|_H\|^o$$

and by letting $n \to \infty$, we deduce that $\|2x|_H\|^o \leq 1$. But $\varepsilon > 0$ is arbitrary, and we find a contradiction: $1 \geq \|2x\|^o = 2$. ∎

Remark. From Theorem 3.26, we conclude that L_M^o and l_M^0 are non-l_n^1 for any $n \geq 2$ and that they have no subspace isometric to l^∞ or l^1.

Theorem 3.27. *Let $x \in S(L_M)$ or $S(l_M), n \geq 2$. The following are equivalent*:

(i) *x is a uniformly non-l_n^1 point*,
(ii) *x is a non-l_n^1 point*,
(iii) $\theta(x) < 1$.

Proof. (i)⇒(ii). Trivial.

(ii)⇒(iii). If $\theta(x) = 1$, then as in the proof of Lemma 2.48, we can construct $x_i \in S(L_M)$ such that $\theta(x_i) = \theta(x) = 1$ and that the supports of x_i are mutually disjoint $(i = 1, \ldots, 2^{n-1})$ and $x_i(t) = 0$ or $= x(t)$. Consequently, if we define

$$\begin{aligned} u_2 &= x_1 + \ldots + x_{2^{n-2}} - x_{2^{n-2}+1} - \ldots - x_{2^{n-1}}, \\ u_3 &= x_1 + \ldots + x_{2^{n-3}} - \ldots - x_{2^{n-2}} + \ldots + x_{2^{n-2}+2^{n-3}} - \ldots - x_{2^{n-1}}, \\ u_n &= x_1 - x_2 + x_3 - x_4 + \ldots - x_{2^{n-1}}, \end{aligned}$$

then for any $\varepsilon_i = +1$ or -1, $i = 2, \ldots, n$, there exists $j \leq 2^{n-1}$ such that the restriction of $\varepsilon_i u_i$ to the support of x_j is just x_j $(i = 1, \ldots, 2^{n-1})$. Therefore,

$$n \geq \|x + \varepsilon_2 u_2 + \ldots + \varepsilon_n u_n\| \geq \|n x_j\| = n,$$

which shows that x is not an N-l_n^1P.

(iii)⇒(i). By (iii), $\varrho_M(x) = 1$ and $\varrho_M((1 + \lambda)x) < \infty$ for some $\lambda > 0$. Take $c > 1$ such that $\varrho_M(x|_A) \geq 7/8$, where $A = \{t \in G : c^{-1} \leq |x(t)| \leq c\}$. Let $d > 2c$ satisfy $M(d) \geq 8M(c)$ and set

$$\sigma = \sup\{2M(u/2)/M(u) : c^{-1} \leq u \leq d\}.$$

Then $0 < \sigma < 1$. Define $\delta = 3(1 - \sigma)/8$ and take $\varepsilon > 0$ such that $\varrho_M((1 + \varepsilon)x) < 1 + \delta$. We complete the proof by showing that

$$\min\{\|x + y\|, \|x - y\|\} \leq 2 - \frac{\varepsilon}{1 + \varepsilon}$$

for all $y \in S(L_M)$ (this shows that x is a UN-l_2^1P, and so, a UN-l_n^1P since a UN-l_k^1P is a UN-l_{k+1}^1P). Indeed, let $y \in S(L_M)$ and $B = \{t \in G : |y(t)| \leq d\}$. Then $M(d)\mu(G \setminus B) \leq \varrho_M(y|_{G \setminus B}) \leq 1$ and thus,

$$\varrho_M(x|_{A \setminus B}) \leq M(c)\mu(A \setminus B) \leq M(c)/M(d) \leq 1/8.$$

Set $H = A \cap B$. Then

$$7/8 \leq \varrho_M(x|_A) = \varrho_M(x|_{A \setminus B}) + \varrho_M(x|_H) \leq 1/8 + \varrho_M(x|_H).$$

Define

(3.38) $$D = \{t \in H : x(t)y(t) \geq 0\}, \qquad E = H \setminus D, \qquad u = (1+\varepsilon)x.$$

Then by the definition of H and D,

$$\begin{aligned}\varrho_M\left(\frac{u-y}{2}\bigg|_D\right) &\leq \varrho_M\left(\frac{\max\{|u|,|y|\}}{2}\bigg|_D\right)\\ &\leq \frac{\sigma}{2}\varrho_M(\max\{|u|,|y|\}|_D) \leq \frac{\sigma}{2}[\varrho_M(u|_D) + \varrho_M(y|_D)].\end{aligned}$$

Similarly, we have

$$\varrho_M\left(\frac{u+y}{2}\bigg|_E\right) \leq \frac{\sigma}{2}[\varrho_M(u|_E) + \varrho_M(y|_E)].$$

Combining this with

$$M\left(\frac{u(t) \pm y(t)}{2}\right) \leq \frac{M(u(t)) + M(y(t))}{2} \qquad (t \in H),$$

we deduce that

$$\varrho_M\left(\frac{u+y}{2}\bigg|_H\right) + \varrho_M\left(\frac{u-y}{2}\bigg|_H\right) \leq \frac{1+\sigma}{2}[\varrho_M(u|_H) + \varrho_M(y|_H)].$$

Consequently, by the convexity of M and since (3.38) and the choice of ε imply

$$2 + \delta \geq \varrho_M(x) + \delta + \varrho_M(y) \geq \varrho_M(u) + \varrho_M(y),$$

we conclude that

$$\begin{aligned}2 + \delta - \varrho_M\left(\frac{u+y}{2}\right) - \varrho_M\left(\frac{u-y}{2}\right)&\\ &\geq \varrho_M(u) + \varrho_M(y) - \varrho_M\left(\frac{u+y}{2}\right) - \varrho_M\left(\frac{u-y}{2}\right)\\ &\geq \varrho_M(u|_H) + \varrho_M(y|_H) - \varrho_M\left(\frac{u+y}{2}\bigg|_H\right) - \varrho_M\left(\frac{u-y}{2}\bigg|_H\right)\\ &\geq \frac{1-\sigma}{2}[\varrho_M(u|_H) + \varrho_M(y|_H)] \geq \frac{1-\sigma}{2}\varrho_M(x|_H) \geq 3(1-\sigma)/8 = \delta.\end{aligned}$$

This means

$$\min\left\{\varrho_M\left(\frac{u+y}{2}\right),\ \varrho_M\left(\frac{u-y}{2}\right)\right\} \leq 1.$$

Without loss of generality, we may assume $\varrho_M\left(\frac{u+y}{2}\right) \leq 1$, i.e.,

$$\left\|\frac{u+y}{2}\right\| \leq 1 \quad \text{or} \quad \left\|\frac{x}{2} + \frac{y}{2(1+\varepsilon)}\right\| \leq \frac{1}{1+\varepsilon}.$$

Since

$$\left|\left\|\frac{x+y}{2}\right\| - \left\|\frac{x}{2} + \frac{y}{2(1+\varepsilon)}\right\|\right| \leq \left\|\frac{x+y}{2} - \frac{x}{2} - \frac{y}{2(1+\varepsilon)}\right\| = \frac{1}{2} - \frac{1}{2(1+\varepsilon)} = \frac{\varepsilon}{2(1+\varepsilon)},$$

we arrive at

$$\left\|\frac{x+y}{2}\right\| \leq \frac{1}{1+\varepsilon} + \frac{\varepsilon}{2(1+\varepsilon)} = 1 - \frac{\varepsilon}{2(1+\varepsilon)}. \ \blacksquare$$

From Theorem 3.27, we immediately have

THEOREM 3.28. (i) *E_M and h_M are locally uniformly non-l_n^1 $(n \geq 2)$.*
(ii) *L_M or l_M is locally uniformly non-l_n^1 iff it is non-l_n^1 and iff $M \in \Delta_2$ $(n \geq 2)$.*

THEOREM 3.29. *Let $X = L_M^o$ or l_M^o $(n \geq 2)$. Then the following are equivalent*:

(i) *X is locally uniformly non-l_n^1.*
(ii) *$S(X)$ has a uniformly non-l_n^1 point.*
(iii) *$M \in \nabla_2$.*

Proof. (i)⇒(ii). Trivial.

(ii)⇒(iii). Let $x \in S(L_M^o)$. For each $\varepsilon > 0$, pick $v \in B(L_N)$ such that $\langle v, x\rangle > 1 - \varepsilon$ and $x(t)v(t) \geq 0$ for all $t \in G$. Find a nonnull set E in $\{t \in G : v(t) \neq 0\}$ such that $\|x|_E\|^o < \varepsilon$. Let $\varrho_N(v|_{G\setminus E}) = 1 - \sigma$. Then $\sigma > 0$.

If $M \notin \nabla_2$, then there exist $w > 0$ and disjoint subsets $\{E_i\}_{i=1}^{n-1}$ of E such that

$$N((1+\varepsilon)w) > (n-1)\sigma^{-1}N(w), \quad N(w)\mu E_i = (n-1)^{-1}\sigma \quad (i = 1, \ldots, n-1).$$

Hence,

$$\varrho_N(w\chi_{E_i}) = N(w)\mu E_i = (n-1)^{-1}\sigma,$$
$$\varrho_N((1+\varepsilon)w\chi_{E_i}) > (n-1)\sigma^{-1}N(w)\mu E_i = 1.$$

This shows that $1 \geq \|w\chi_{E_i}\|_N \geq (1+\varepsilon)^{-1}$ $(i \leq n-1)$. Therefore, by Proposition 1.84, there exists $u > 0$ such that $\|u\chi_{E_i}\|^o = 1$ and

$$\langle u\chi_{E_i}, w\chi_{E_i}\rangle = uw\mu E_i = \|w\chi_{E_i}\|_N > (1-\varepsilon)^{-1} \qquad (i = 1, \ldots, n-1).$$

Given $\varepsilon_i = +1$ or -1, $i \leq n-1$, let

$$f = v|_{G\setminus E} + \varepsilon_1 w\chi_{E_1} + \ldots + \varepsilon_{n-1}w\chi_{E_{n-1}}.$$

Then $\varrho_N(f) = \varrho_N(v|_{G\setminus E}) + N(w)\mu E_1 + \ldots + N(w)\mu E_{n-1} \leq 1 - \sigma + \sigma = 1$ and thus,

$$\begin{aligned}\|x + \varepsilon_1 u\chi_{E_1} + \ldots + \varepsilon_{n-1}u\chi_{E_{n-1}}\|^o &\geq \langle f, x + \varepsilon_1 u\chi_{E_1} + \ldots + \varepsilon_{n-1}u\chi_{E_{n-1}}\rangle \\ &\geq \langle v, x|_{G\setminus E}\rangle + uw(\mu E_1 + \ldots + \mu E_{n-1}) \\ &> 1 - 2\varepsilon + (n-1)(1+\varepsilon)^{-1},\end{aligned}$$

which shows that x is not a UN-l_n^1P since ε is arbitrary.

(iii)⇒(i). If (i) does not hold, then there exist $x, x_n \in S(L_M^o)$ such that $\|x+x_n\|^o \to 2$. Replace x_n, y_n by $(x+x_n)/2$, $(x-x_n)/2$ respectively in Lemma 3.22. Then $|x+x_n| - |x-x_n| \to 0$ in measure according to Theorem 1.35. But

$$|\,|x(t)+x_n(t)| - |x(t)-x_n(t)|\,| = \begin{cases} 2|x_n(t)|, & |x(t)| \geq |x_n(t)|, \\ 2|x(t)|, & |x(t)| < |x_n(t)|, \end{cases}$$

and we find that $x_n(t) \to 0$ in measure on $E = \{t \in G : x(t) \neq 0\}$. Passing to a subsequence if necessary, we may assume $x_n \to 0$ μ-a.e. on E.

Pick constants $\beta > 0$ and $\delta > 0$ such that $e \in \Sigma$, $\mu e < \delta$ implies $k^{-1}\varrho_M(kx|_{G\setminus e}) > \beta$, where $k \in K(x)$. Then $\mu e < \delta$ implies

$$1 = \|x\|^o = k^{-1}[1 + \varrho_M(kx|_e)] + k^{-1}\varrho_M(kx|_{G\setminus e}) \geq \|x|_e\|^o + \beta.$$

Hence, $\|x|_e\|^o \leq 1 - \beta$ and thus, $\|x|_{G\setminus e}\|^o \geq \beta$. Select D in E with $\mu D < \delta$ such that $x_n(t) \to 0$ uniformly on $E\setminus D$. Since $\|x+x_n\|^o \to 2$, we can find $v_n \in L_N$ with $\varrho_N(v_n) \leq 1$

such that $\langle v_n, x+x_n\rangle \to 2$. Then $\langle v_n, x\rangle \to 1$ and $\langle v_n, x_n\rangle \to 1$ as $n \to \infty$. Consequently,

$$1 = \lim_n \langle x_n, v_n|_{G\setminus(E\setminus D)}\rangle \le \lim_n \|v_n|_{G\setminus(E\setminus D)}\|_N \le 1$$

implies $\varrho_N(v_n|_{G\setminus(E\setminus D)}) \to 1$ since $N \in \Delta_2$. This immediately yields $\varrho_N(v_n|_{E\setminus D}) \to 0$, and so $\|v_n|_{E\setminus D}\|_N \to 0$ since $N \in \Delta_2$. But this yields a contradiction:

$$1 = \lim_n [\langle x, v_n|_{E\setminus D}\rangle + \langle x, v_n|_D\rangle] \le \liminf_n [\|v_n|_{E\setminus D}\|_N + \|x|_D\|^o] = \|x|_D\|^o \le 1-\beta < 1,$$

completing the proof. ∎

3.4. Some geometrical characterization of reflexivity. This section presents some geometrical properties equivalent to reflexivity for Orlicz spaces which may not be true for general Banach spaces. We first introduce some concepts.

Let X and Y be Banach spaces. We say that Y is *finitely representable* in X if for any finite-dimensional subspace Y_n of Y and any $\varepsilon > 0$, X has a subspace X_n isomorphic to Y_n and the isomorphism T from X_n to Y_n satisfies $\|T\| \cdot \|T^{-1}\| \le 1+\varepsilon$.

X is said to have the *super property* P provided that each Y which is finitely representable in X has the property P. For instance, X is superreflexive iff any Y finitely representable in X is reflexive.

X is said to be *quasi-reflexive* if $\dim(X^{**}/JX) < \infty$, where $J : X \to X^{**}$ is defined by $\langle Jx, x^*\rangle = \langle x^*, x\rangle$ $(x \in X,\ x^* \in X^*)$.

We say that X has the *Banach–Saks property* (BSP) if any bounded sequence $\{x_n\}$ in X has a subsequence $\{y_k\}$ such that the limit

$$\lim_k \frac{y_1 + \ldots + y_k}{k}$$

exists.

X is said to be *P-convex* if there exist some $\varepsilon > 0$ and $n \in \mathbb{N}$ such that for all $x_1, \ldots, x_n \in S(X)$,

$$\min\{\|x_j - x_k\| : j \ne k,\ j,k \le n\} \le 2-\varepsilon.$$

X is said to be *Q-convex* if there exist some $\varepsilon > 0$ and $n \in \mathbb{N}$ such that for all $x_1, \ldots, x_n \in S(X)$,

$$\min_{k\le n} \Big\| \sum_{i=1}^{k-1} (x_i - x_k) \Big\| \le k-\varepsilon.$$

It is known that

$$\begin{aligned} \text{UR} &\Rightarrow P\text{-convexity} \Rightarrow Q\text{-convexity} \Rightarrow \text{superreflexivity} \\ &\Rightarrow \text{BSP} \Rightarrow \text{reflexivity} \Rightarrow \text{quasi-reflexivity}. \end{aligned}$$

THEOREM 3.30. *Let $X = L_M, L_M^o, l_M$ or l_M^o. Then the following are equivalent*:

(1) *X is superreflexive.*
(2) *X is reflexive.*
(3) *X is quasi-reflexive.*
(4) *X has the Banach–Saks property.*
(5) *X is uniformly nonsquare.*

(6) *X is B-convex.*
(7) *X has uniformly normal structure.*
(8) *X has no subspaces isomorphic to l^1.*
(9) *X has no complemented subspaces isomorphic to l^1 or c_0.*
(10) *X is P-convex.*
(11) *X is Q-convex.*

Proof. (2)⇒(1). If X is reflexive, then by Theorem 1.18, it has a uniformly rotund equivalent norm, and thus, it is superreflexive.

(3)⇒(2). We only consider the case $X = L_M$. Suppose that L_M is quasi-reflexive; then so is E_M. If $M \notin \Delta_2$, then L_M is not separable. Since E_M is separable, we have a contradiction: $\dim(E_M^{**}/E_M) \geq \dim(L_M/E_M) = \infty$. If $M \notin \nabla_2$, then similarly, we also have $\dim(E_M^{**}/E_M) = \dim({L_N^o}^*/E_M) = \infty$. Hence, L_M is reflexive.

(2)⇔(5)⇔(6)⇔(7)⇔(8)⇔(9) follow from the results in §3.1, §3.3 and Theorems 1.90, 1.94 and Corollary 1.46.

It only remains to show (2)⇒(10). We verify this for $X = l_M$ and $X = l_M^o$, and leave the other two cases $X = L_M$ and $X = L_M^o$ to the reader. We first establish a lemma.

LEMMA 3.31. *If $M \in \Delta_2 \cap \nabla_2$ near the origin, then for any $L > 0$ and $k'' \geq k' \geq 1$, there exists $\varepsilon > 0$ such that*

$$\begin{aligned} H &= \frac{k+h}{kh} M\left(\frac{kh}{k+h} \cdot \frac{u-v}{1-\varepsilon}\right) \\ &\quad + \frac{h+l}{hl} M\left(\frac{hl}{h+l} \cdot \frac{v-w}{1-\varepsilon}\right) + \frac{l+k}{lk} M\left(\frac{lk}{l+k} \cdot \frac{w-u}{1-\varepsilon}\right) \\ &\leq 2\left[\frac{M(ku)}{k} + \frac{M(hv)}{h} + \frac{M(lw)}{l}\right] \end{aligned} \tag{3.39}$$

whenever $k, h, l \in [k', k'']$ and $|u|, |v|, |w| \leq L$.

Proof. Since $M \in \nabla_2$, there exists $\gamma \in (0,1)$ such that $|t| \leq k''L$ implies

$$M(t) = M\left(\frac{k'+k''}{k''} \cdot \frac{k''}{k'+k''} t\right) \geq \frac{1}{1-\gamma} \cdot \frac{k'+k''}{k''} M\left(\frac{k''}{k'+k''} t\right).$$

Hence, for any $a, b \in [k', k'']$ and $t \in [0, L]$, by (1.7),

$$M\left(\frac{a}{a+b} bt\right) \frac{a+b}{a} \leq M\left(\frac{k''}{k'+k''} bt\right) \frac{k'+k''}{k''} \leq (1-\gamma) M(bt). \tag{3.40}$$

Since $M \in \Delta_2$, we can find $K > 1$ such that $M(2t) \leq KM(t)$ and $M(k''t) \leq KM(t)$ for all $t \in [0, k''L]$. Moreover, we can choose $K' > 1$ such that $|t| \leq L$ implies

$$M(t) = M\left(\frac{K}{\gamma} \cdot \frac{\gamma}{K} t\right) \leq K' M\left(\frac{\gamma}{K} t\right).$$

Next we show that $|s| \leq |t| \leq k''L$ implies

$$M(t+s) \leq (1 + K|s/t|) M(t). \tag{3.41}$$

Indeed, if $s = 0$, then (3.41) holds automatically. If $|s| > 0$, then by the convexity of M and the choice of K, we also have

$$\begin{aligned} M(t+s) &= M((1-|s/t|)t + |s/t|(t+|t/s|s)) \le (1-|s/t|)M(t) + |s/t|M(t+|t/s|s) \\ &\le M(t) + |s/t|M(2t) \le (1+K|s/t|)M(t). \end{aligned}$$

Next, we show that $\varepsilon = \gamma^2/(12K^2K'k'') < 1/2$ satisfies (3.39). In fact, if $a, b \in [k', k'']$ and $|s| \le |t| \le L$, then by (3.41),

$$\begin{aligned} \frac{a+b}{ab}M\left(\frac{ab}{a+b}\cdot\frac{t-s}{1-\varepsilon}\right) &= \frac{a+b}{ab}M\left(\frac{ab}{a+b}\left[(t-s)+\frac{\varepsilon(t-s)}{1-\varepsilon}\right]\right) \\ &\le \frac{a+b}{ab}\left(1+\frac{K\varepsilon}{1-\varepsilon}\right)M\left(\frac{ab}{a+b}(t-s)\right) \\ &\le \frac{a+b}{ab}M\left(\frac{ab}{a+b}(t-s)\right) + \frac{2}{k'}\cdot\frac{K\varepsilon}{1-\varepsilon}M(k''t) \\ &\le \frac{a+b}{ab}M\left(\frac{ab}{a+b}(t-s)\right) + \frac{2}{k'}\cdot\frac{K^2\varepsilon}{1-\varepsilon}M(t) \\ &\le \frac{M(at)}{a} + \frac{M(bs)}{b} + \frac{2K^2\varepsilon}{1-\varepsilon}M(t). \end{aligned} \tag{3.42}$$

Suppose $k, h, l \in [k', k'']$ and $|u|, |v|, |w| \le L$. We verify (3.39). Without loss of generality, we assume $|u| \ge |v| \ge |w|$.

First we assume $uw \ge 0$. In this case, by (3.40),

$$\begin{aligned} \frac{l+k}{lk}M\left(\frac{lk}{l+k}(w-u)\right) &\le \frac{l+k}{lk}M\left(\frac{lk}{l+k}u\right) \\ &\le \frac{l+k}{lk}\cdot\frac{l(1-\gamma)}{l+k}M(ku) = (1-\gamma)\frac{M(ku)}{k}. \end{aligned}$$

Hence, (3.42) implies

$$\begin{aligned} \frac{l+k}{lk}M\left(\frac{lk}{l+k}\cdot\frac{w-u}{1-\varepsilon}\right) &\le \frac{l+k}{lk}M\left(\frac{lk}{l+k}(w-u)\right) + \frac{2K^2\varepsilon}{1-\varepsilon}M(u) \\ &\le (1-\gamma)\frac{M(ku)}{k} + \frac{2K^2\varepsilon}{1-\varepsilon}M(u). \end{aligned}$$

Thus, if we replace (a, b, t, s) by (k, h, u, v) and (h, l, v, w) respectively, then

$$\begin{aligned} H &\le \frac{M(ku)}{k} + \frac{M(hv)}{h} + \frac{M(lw)}{l} + (1-\gamma)\frac{M(ku)}{k} + \frac{2K^2\varepsilon}{1-\varepsilon}[M(u)+M(v)+M(w)] \\ &\le 2\left[\frac{M(ku)}{k} + \frac{M(hv)}{h} + \frac{M(lw)}{l}\right] + \left(\frac{6K^2\varepsilon}{1-\varepsilon} - \gamma\right)M(u) \\ &\le 2\left[\frac{M(ku)}{k} + \frac{M(hv)}{h} + \frac{M(lw)}{l}\right]. \end{aligned}$$

Similarly, we can verify (3.39) for the case $uv \ge 0$.

If $uw < 0$ and $uv > 0$, then $vw > 0$. First we assume $|v/u| \ge \gamma/K$. Since $vw > 0$, by (3.40) and the choice of K',

$$\begin{aligned} \frac{h+l}{hl}M\left(\frac{hl}{h+l}(v-w)\right) &< \frac{h+l}{hl}M\left(\frac{hl}{h+l}v\right) \le (1-\gamma)\frac{M(hv)}{h} \\ &\le \frac{M(hv)}{h} - \frac{\gamma}{h}M\left(\frac{\gamma}{K}hu\right) \le \frac{M(hv)}{h} - \frac{\gamma}{h}M\left(\frac{\gamma}{K}u\right) \end{aligned}$$

$$\le \frac{M(hv)}{h} - \frac{\gamma}{k''K'}M(u).$$

Similarly to the case $uw \ge 0$, we have

$$\begin{aligned} H &\le 2\left[\frac{M(ku)}{k} + \frac{M(hv)}{h} + \frac{M(lw)}{l}\right] + \left(\frac{6K^2\varepsilon}{1-\varepsilon} - \frac{\gamma}{K'k''}\right)M(u) \\ &\le 2\left[\frac{M(ku)}{k} + \frac{M(hv)}{h} + \frac{M(lw)}{l}\right]. \end{aligned}$$

Finally, we consider the case $vw > 0$ and $|v/u| \le \gamma/K$. In this case, by (3.41) and (3.40), we have

$$\begin{aligned} \frac{k+h}{kh}M\left(\frac{kh}{k+h}(u-v)\right) &\le \frac{k+h}{kh}(1+\gamma)M\left(\frac{kh}{k+h}u\right) \\ &\le \frac{k+h}{kh}(1+\gamma)(1-\gamma)\frac{h}{k+h}M(ku) = (1-\gamma^2)\frac{M(ku)}{k}, \end{aligned}$$

and thus, as in the previous cases, we deduce that

$$\begin{aligned} H &\le 2\left[\frac{M(ku)}{k} + \frac{M(hv)}{h} + \frac{M(lw)}{l}\right] + \left(\frac{6K^2\varepsilon}{1-\varepsilon} - \gamma^2\right)\frac{M(ku)}{k} \\ &\le 2\left[\frac{M(ku)}{k} + \frac{M(hv)}{h} + \frac{M(lw)}{l}\right]. \ \blacksquare \end{aligned}$$

Proof of Theorem 3.30. First we set $X = l_M^o$. Let $k' = \inf\{k \in K(x) : x \in S(l_M^o)\}$, $k'' = \sup\{k \in K(x) : x \in S(l_M^o)\}$ and $L = \sup\{\alpha > 0 : N(p(\alpha)) \le 1\}$. Then for any $u \in S(l_M^o)$ and $b \in K(u)$, $1 \le k' \le b \le k'' < \infty$ (since $M \in \nabla_2$) and by the definition of $K(u)$, $|u(i)| \le b|u(i)| \le L$ $(i \in \mathbb{N})$. Take $\varepsilon > 0$ as in Lemma 3.31. Then for any $x, y, z \in S(l_M^o)$ and any $k \in K(x)$, $h \in K(y)$ and $l \in K(z)$, by Lemma 3.31,

$$\begin{aligned} &\left\|\frac{x-y}{1-\varepsilon}\right\|^o + \left\|\frac{y-z}{1-\varepsilon}\right\|^o + \left\|\frac{z-x}{1-\varepsilon}\right\|^o \\ &\quad\le \frac{k+h}{kh}\left[1 + \varrho_M\left(\frac{kh}{k+h}\frac{x-y}{1-\varepsilon}\right)\right] + \frac{h+l}{hl}\left[1 + \varrho_M\left(\frac{hl}{h+l}\frac{y-z}{1-\varepsilon}\right)\right] \\ &\qquad + \frac{l+k}{lk}\left[1 + \varrho_M\left(\frac{lk}{l+k}\frac{z-x}{1-\varepsilon}\right)\right] \\ &\quad\le 2\left[\frac{1}{k} + \frac{1}{h} + \frac{1}{l} + \frac{1}{k}\varrho_M(kx) + \frac{1}{h}\varrho_M(hy) + \frac{1}{l}\varrho_M(lz)\right] \\ &\quad= 2[\|x\|^o + \|y\|^o + \|z\|^o] = 6. \end{aligned}$$

This implies

$$\min\{\|x-y\|^o, \|y-z\|^o, \|z-x\|^o\} \le 2(1-\varepsilon).$$

Next, we set $X = l_M$. Let $k' = k'' = 1$ and $L = M^{-1}(1)$. Take $\varepsilon > 0$ as in Lemma 3.31. Then for each $x, y, z \in S(l_M)$, by Lemma 3.31,

$$\varrho_M\left(\frac{x-y}{2(1-\varepsilon)}\right) + \varrho_M\left(\frac{y-z}{2(1-\varepsilon)}\right) + \varrho_M\left(\frac{z-x}{2(1-\varepsilon)}\right) \le \varrho_M(x) + \varrho_M(y) + \varrho_M(z) = 3.$$

This implies

$$\min\left\{\varrho_M\left(\frac{x-y}{2(1-\varepsilon)}\right), \varrho_M\left(\frac{y-z}{2(1-\varepsilon)}\right), \varrho_M\left(\frac{z-x}{2(1-\varepsilon)}\right)\right\} \le 1.$$

Therefore, $\min\{\|x-y\|, \|y-z\|, \|z-x\|\} \le 2(1-\varepsilon)$. ∎

3.5. Roughness, girth and the Radon–Nikodym property. Let X be a Banach space. X is said to have the *Radon–Nikodym property* (RNP) if for any finite measurable space (Ω, Σ, μ) and every μ-continuous vector measure $F : \Sigma \to X$ of bounded variation, there exists an $f \in L_X(\mu)$ such that

$$F(E) = \int_E f\, d\mu \qquad (E \in \Sigma).$$

X is said to have the *Krein–Milman* property (KMP) if every bounded closed convex set K in X can be written as $K = \overline{\mathrm{co}}(\mathrm{Ext}\, K)$, the closure of the convex hull of the extreme points of K.

X is called a *weakly compactly generated space* if it is the closure of the subspace spanned by some weakly compact subset K.

In §3.2, we introduced the concept of denting points. If a subset of X has at least one denting point, then it is called a *dentable set*. If every bounded convex subset of X is dentable, then X is called a *dentable space*.

It is well known that if a dual space is separable or weakly compactly generated, then it has RNP; X has RNP iff it is dentable. Moreover, RNP $\Rightarrow$ KMP and for dual spaces, RNP $\Leftrightarrow$ KMP. But it is unknown if the equivalence remains true for general Banach spaces.

Let Γ be the set of all curves $c = \{g^s \in S(X) : 0 \le s \le \lambda(c)\}$, where g^s satisfies

(i) $g^s : [0, \lambda(c)] \to X$ is 1-1,
(ii) $\|g^s\| = 1$ $(0 \le s \le \lambda(c))$,
(iii) the arc length of c from g^0 to g^s is s $(0 \le s \le \lambda(c))$,
(iv) $g^{s+\lambda(c)/2} = -g^{-s}$ $(0 \le s \le \lambda(c)/2)$.

The *girth* of X is defined by $\mathrm{Girth}\, X = \inf\{\lambda(c) : c \in \Gamma\}$. It is easy to verify $4 \le \mathrm{Girth}\, X \le 8$ for any Banach space X. If there exists $c \in \Gamma$ such that $\lambda(c) = 4$, then X is called a *flat space*, or we say that $\mathrm{Girth}\, X = 4$ is attainable.

It is known that $\mathrm{Girth}\, X > 4 \Leftrightarrow X$ is superreflexive; flatness of $X \Rightarrow$ flatness of X^*; flatness of $X \Rightarrow X$ and X^* fail RNP; flatness of $X \Rightarrow X$ is not LUNS.

For each $x \in S(X)$, let

$$\varepsilon(x) = \sup\{\varepsilon > 0 : \text{there exist } f_n, g_n \in S(X^*) \text{ with } f_n(x), g_n(x) \to 1 \\ \text{and } \limsup_n \|f_n - g_n\| \ge \varepsilon\}.$$

If $\varepsilon(x) > 0$ for every $x \in S(X)$, then X is called a *pointwise rough space*; if $\varepsilon(X) = \inf\{\varepsilon(x) : x \in S(X)\} > 0$, then X is said to be *rough*; if $\inf\{\mathrm{diam}\, A(x) : x \in S(X)\} > 0$, where $A(x)$ denotes the set of supporting functionals of x, i.e., $A(x) = \{f \in S(X^*) : f(x) = \|x\|\}$, then X is called a *strongly rough space*. Clearly, roughness is closely related to nondifferentiability. In fact, pointwise roughness $\Leftrightarrow$ Fréchet nondifferentiability

everywhere; strong roughness $\Leftrightarrow$ uniform Gateaux nondifferentiability; and roughness is weaker than uniform Fréchet nondifferentiability.

THEOREM 3.32. *Let $X = L_M, E_M, l_M$ or h_M. Then the following are equivalent*:

(i) *X has the Radon–Nikodym property.*
(ii) *X has the Krein–Milman property.*
(iii) *$M \in \Delta_2$.*

Proof. (iii)$\Rightarrow$(i). If $M \in \Delta_2$, then X is a separable dual space, therefore, it has RNP.

(i)$\Rightarrow$(ii). Trivial.

(ii)$\Rightarrow$(iii). We only consider function spaces. If $M \notin \Delta_2$, then there exist $u_n > 0$ and disjoint $G_n \in \Sigma$ $(n \in \mathbb{N})$ such that $\varrho_M(\sum x_k) \le 1$ and $\|x_k\| \ge 1/2$, where $x_k = u_k \chi_{G_k}$, $k \in \mathbb{N}$. Let

$$K = \Big\{ \sum_{i=1}^{\infty} \varepsilon_i x_i : (\varepsilon_i) \in B(c_0) \Big\}.$$

Then it is easily checked that K is a bounded closed convex subset of E_M. We complete the proof by showing that K has no extreme points. Indeed, for any $z = \sum_i \varepsilon_i x_i \in K$, there exists $j \in \mathbb{N}$ such that $|\varepsilon_j| < 1/3$. Define

$$y = \sum_{i \ne j} \varepsilon_i x_i - \varepsilon_j x_j, \qquad z = \sum_{i \ne j} \varepsilon_i x_i + 3\varepsilon_j x_j.$$

Then $y, z \in K$, $y \ne z$ and $y + z = 2x$. This means that x is not an extreme point of K. Since $x \in K$ is arbitrary, we deduce that $\operatorname{Ext} K = \emptyset$. ∎

REMARK. From Theorem 3.32, we see that E_M and h_M do not have RNP if $M \notin \Delta_2$. Noticing that they are separable spaces, we find that E_M and h_M are nondual spaces if $M \notin \Delta_2$.

THEOREM 3.33. (i) *E_M and h_M are weakly compactly generated spaces.*

(ii) *L_M or l_M is weakly compactly generated iff $M \in \Delta_2$.*

Proof. (i) Since E_M and h_M are separable spaces, they are compactly generated, and of course, weakly compactly generated.

(ii) The "if" part follows from (i). Suppose that L_M or l_M is WCG. Then it has RNP since it is a dual space, and thus by Theorem 3.32, $M \in \Delta_2$. ∎

Before estimating the girth of Orlicz spaces, we present a lemma.

LEMMA 3.34. *l^∞ is a flat space.*

Proof. Let $\{r_i\}$ be the set of rational numbers in $[-1, 1)$ and $r_1 = -1$. We define a sequence $\{a_n\}$ of functions on $[0, 2]$ by

$$a_n(s) = \begin{cases} r_n + s, & 0 \le s \le 1 - r_n, \\ 2 - r_n - s, & 1 - r_n < s \le 2, \end{cases} \qquad (n \in \mathbb{N}).$$

Set $g^s = \{a_n(s)\}_{n \in \mathbb{N}}$, $0 \le s \le 2$. We first show $\|g^s\|_\infty = 1$ $(0 \le s \le 2)$. Indeed, it is obvious that $\|g^s\|_\infty = \sup_n |a_n(s)| \le 1$. On the other hand, for any $\varepsilon > 0$, since $1 - s \in [-1, 1]$, there exists $j \in \mathbb{N}$ such that $1 - s - \varepsilon < r_j \le 1 - s$, i.e., $a_j(s) = r_j + s > 1 - \varepsilon$. This implies $\|g^s\|_\infty \ge 1 - \varepsilon$, whence $\|g^s\|_\infty = 1$ $(s \in [0, 2])$.

Clearly, $g^s : [0,2] \to l^\infty$ is 1-1 and

$$g^0 = \{a_n(0)\}_n = \{-a_n(2)\}_n = -g^2, \qquad g^{s+1} = \{a_n(s+1)\}_n = \{-a_n(-s)\}_n = -g^{-s}.$$

It remains to check $\|g^s - g^t\|_\infty = |s-t|$ $(s,t \in [0,2])$. Let $0 \le t < s \le 2$. Then it is easy to see that $\|g^s - g^t\|_\infty \le |s-t|$. On the other hand, when $t > 0$, we can find $j \in \mathbb{N}$ such that $0 < 1 - r_j < t$, and thus, $\|g^s - g^t\|_\infty \ge |a_j(s) - a_j(t)| = |s-t|$. If $t = 0$, then for each $\varepsilon > 0$, we can find $k \in \mathbb{N}$ such that $1 - r_k < \min\{s, \varepsilon/2\}$. So,

$$|g^s - g^t| \ge |a_k(s) - a_k(0)| = |2(1-r_k) - s| > s - \varepsilon.$$

Thus, in any case, $\|g^s - g^t\|_\infty = |s-t|$. ∎

THEOREM 3.35. (I) *Let $X = L_M$ or l_M. Then*

(1) $\operatorname{Girth} X > 4$ *iff X is reflexive.*
(2) ($\operatorname{Girth} X = 4$ *and X is not flat*) *iff $M \in \Delta_2 \setminus \nabla_2$.*
(3) *X is flat iff $M \notin \Delta_2$.*

(II) *Let $Y = L_M^o$ or l_M^o. Then*

(a) $\operatorname{Girth} Y > 4$ *iff Y is reflexive.*
(b) *Y is not a flat space.*
(c) ($\operatorname{Girth} Y = 4$ *and Y is not flat*) *iff Y is not reflexive.*

Proof. (1) and (a) follow from Theorem 3.30; (3) follows from Lemma 3.34 and Theorem 1.89; (b) follows from Theorem 3.26. (2) is a direct consequence of (1) and (3), while (c) comes from (a) and (b). ∎

Next, we investigate the roughness of Orlicz spaces.

THEOREM 3.36. *Let $X = L_M^o$ or l_M^o. Then the following are equivalent*:

(i) *X is rough.*
(ii) *X is pointwise rough.*
(iii) *$M \notin \nabla_2$.*

Proof. We only prove the theorem for $X = L_M^o$.

(i)⇒(ii). Trivial.

(ii)⇒(iii). If $M \in \nabla_2$, then by Theorem 2.58, E_M^o is an Asplund space. Hence, there exists at least one Fréchet differentiable point $x \in S(E_M^o)$. It suffices to verify that x is also Fréchet differentiable in L_M^o. Let $f_n = v_n + \varphi_n \in S(L_M^*)$ satisfy $f_n(x) \to 1$ as $n \to \infty$, where $v_n \in L_N$ and $\varphi_n \in F$ $(n \in \mathbb{N})$. Then by Theorem 1.51 and

$$1 \leftarrow \langle f_n, x\rangle = \langle v_n, x\rangle + \langle \varphi_n, x\rangle = \langle v_n, x\rangle$$

we deduce that $\|v_n\|_N \to 1$. So, $\varrho_N(v_n) \to 1$ since $M \in \nabla_2$, whence, by Theorem 1.51, $\varphi_n \to 0$ as $n \to \infty$. Since x is Fréchet differentiable in E_M^o, we find that $\{v_n\}$ is a Cauchy sequence and hence so is $\{f_n\}$. This means that x is Fréchet differentiable in L_M^o.

(iii)⇒(i). For any $x \in S(L_M^o)$, pick a supporting functional $f = v + \varphi$, where $v \in L_N$ and $\varphi \in F$. Then by Theorem 1.77, $\varrho_N(v) + \|\varphi\| = 1$. Since $M \notin \nabla_2$, there exist $v_n \uparrow \infty$ and $G_n \in \Sigma$ such that

$$N((1+1/n)v_n) > 2^n N(v_n), \quad N(v_n)\mu G_n = 2^{-n} \quad (n \in \mathbb{N}).$$

Put

$$f_n = v|_{G\setminus G_n} + v_n\chi_{G_n} + \varphi, \qquad g_n = v|_{G\setminus G_n} - v_n\chi_{G_n} + \varphi.$$

Then by Theorem 1.51 and since

$$\varrho_M(v|_{G\setminus G_n}) + \varrho_N(v_n\chi_{G_n}) + \|\varphi\| \le \varrho_N(v) + 2^{-n} + \|\varphi\| = 1 + 2^{-n},$$

we have $\|f_n\|_N \le 1 + 2^{-n}$. But since

$$\langle v|_{G\setminus G_n}, x\rangle \to \langle v, x\rangle \quad \text{and} \quad |\langle v_n\chi_{G_n}, x\rangle| \le \varrho_M(x|_{G_n}) + N(v_n)\mu G_n \to 0,$$

we deduce that $\langle f_n, x\rangle \to 1$ as $n \to \infty$. Consequently, $\|f_n\|_N \to 1$ as $n \to \infty$. Similarly, we also have $\|g_n\|_N \to 1$ as $n \to \infty$. On the other hand, since $\varrho_N((1+1/n)v_n\chi_{G_n}) > 1$, we derive $\|v_n\chi_{G_n}\|_N \ge (1+1/n)^{-1}$. Therefore,

$$\|f_n - g_n\|_N = \|2v_n\chi_{G_n}\|_N \ge 2(1+1/n)^{-1} \to 2,$$

i.e., $\varepsilon(x) \ge 2$ and thus, $\inf\{\varepsilon(y) : y \in S(L_M^o)\} = 2$, i.e., L_M^o is a rough space. ∎

Remark. By Theorems 1.16 and 2.52, E_M^o always has an equivalent smooth norm. Therefore, there exists a smooth Banach space X with $\varepsilon(X) = 2$.

Theorem 3.37. *None of L_M^o, L_M, l_M^o and l_M is strongly rough.*

Proof. We only prove the theorem for L_M^o, the others are analogously verified. Clearly, it suffices to show that L_M^o has at least one smooth point. Since a separable space is a weak Asplund space, i.e., the set of smooth points is a G_δ dense set in the space, $S(E_M^o)$ has infinitely many smooth points. We claim that every such point x is a smooth point of L_M^o as well. Indeed, since x is smooth in E_M^o, it has a unique supporting functional v in $S(L_N)$. If $f = w + \varphi$ is a supporting functional of x, where $w \in L_N$ and $\varphi \in F$, then from

$$1 = \langle f, x\rangle = \langle w, x\rangle + \langle \varphi, x\rangle = \langle w, x\rangle,$$

we deduce that w is also a supporting functional of x since Theorem 1.51 implies $\|w\|_N \le 1$. Hence, $w = v$ and Theorem 1.80 yields $\varrho_N(w) = 1$, and so $\varphi = 0$ again by Theorem 1.51. This verifies that $f = v$, i.e., x is a smooth point of L_M^o. ∎

Theorem 3.38. *L_M or l_M is pointwise rough iff $M \notin \nabla_2$.*

Proof. We only deal with L_M. The necessity is proved analogously to the proof of Theorem 3.36. Now, we check the sufficiency. Since a nonsmooth point is of course a rough point, we only need to show that every smooth point $x \in S(L_M)$ in L_M is also rough. Since x is a smooth point, the unique supporting functional v is in $S(L_N^o)$. Since $N \notin \Delta_2$, there exist $v_n \uparrow \infty$ and $G_n \in \Sigma$ such that

$$N((1+1/n)v_n) > 2^n N(v_n), \quad N(v_n)\mu G_n = 2^{-n} \quad (n \in \mathbb{N}).$$

Define

$$y_n = v|_{G\setminus G_n} + (v_n/k)\chi_{G_n}, \qquad z_n = v|_{G\setminus G_n} - (v_n/k)\chi_{G_n},$$

where $k \in K_N(v)$. Then from

$$\begin{aligned}\langle y_n, x\rangle &\ge \langle v|_{G\setminus G_n}, x\rangle - \langle (v_n/k)\chi_{G_n}, |x|\rangle \\ &\ge \langle v|_{G\setminus G_n}, x\rangle - k^{-1}[N(v_n)\mu G_n + \varrho_M(x|_{G_n})] \to \langle v, x\rangle = 1\end{aligned}$$

and

$$\|y_n\|_N^o \le k^{-1}[1+\varrho_N(ky_n)] = k^{-1}[1+\varrho_N(kv|_{G\setminus G_n})] + k^{-1}N(v_n)\mu G_n \to \|v_N^o\| = 1,$$

we get $\|y_n\|_N^o \to 1$. Similarly, we also have $\|z_n\|_N^o \to 1$ and $\langle z_n, x\rangle \to 1$. But

$$\|y_n - z_n\|_N^o \ge \|y_n - z_n\|_N \ge 2k^{-1}\|v_n\chi_{G_n}\|_N \ge 2k^{-1}(1+1/n)^{-1} \to 2/k > 0,$$

and we derive that x is a rough point of L_M. ∎

THEOREM 3.39. *L_M or l_M is rough iff $M \in \Delta_2 \setminus \nabla_2$.*

Proof. $\Leftarrow$ Since $M \in \Delta_2$, every supporting functional v of each point $x \in S(L_M)$ is contained in $S(L_N^o)$. Since $M \notin \nabla_2$, by the proof of Theorem 3.38, we have $\varepsilon(x) \ge 2/k$, where $k \in K_N(v)$. But Theorem 1.35 implies

$$K = \sup\{k \in K_N(w) : \|w\|_N^o = 1\} < \infty,$$

whence $\varepsilon(X) > 2/k > 0$.

$\Rightarrow$ By Theorem 3.38, $M \notin \nabla_2$. Now, we prove $M \in \Delta_2$. If $M \notin \Delta_2$, then for any $m \in \mathbb{N}$, there exists $v > 0$ such that

$$N(v)\mu G \ge 1, \qquad N(3mv) < (1+3m)N(v).$$

Since the right derivative p of M is nondecreasing, we may assume that $\alpha = M^{-1}(2N(v))$ is a continuity point of p. Choose $E \in \Sigma$ such that $N(v)\mu E = 1/2$ and put $u = \alpha\chi_E$, $y = v\chi_E$ and $x = y/\|y\|_N^o$. Then $\varrho_M(u) = M(\alpha)\mu E = 2N(v)\mu E = 1$ implies $\|u\| = 1$ and

$$\langle x, u\rangle = [M^{-1}(1/\mu E)/\|\chi_E\|_N^o]\mu E = 1$$

implies that x is a supporting functional of u. Pick $k \in K(x)$, i.e., $k/\|y\|_N^o \in K(y)$. Then from

$$\begin{aligned}\frac{1}{2} \le \|y\|_N < \|y\|_N^o &\le \frac{1}{3m}[1+\varrho_N(3my)] = \frac{1}{3m}[1+N(3mv)\mu E] \\ &< \frac{1}{3m}[1+(3m+1)N(v)\mu E] = \frac{1}{2}\left(1+\frac{1}{m}\right) \le 1\end{aligned}$$

we deduce that $k/\|y\|_N^o > 1$, and so

$$\frac{1}{2}\left(1+\frac{1}{m}\right) > \|y\|_N^o = \frac{1}{k}\|y\|_N[1+\varrho_N(ky/\|y\|_N^o)] \ge \frac{1}{k}\|y\|_N^o + \varrho_N(y) = \frac{1}{k}\|y\|_N^o + 1/2$$

implies

$$k > 2m\|y\|_N^o > m.$$

Now, we show that $k/\|\chi_E\|_N^o$ is a strictly convex point of N. Indeed, it is clear that u is a smooth point in L_M. So, x is an extreme point of $B(L_N^o)$. This means $kx(t) \in S_N$ and thus, $kv/\|y\|_N^o \in S_N$. In other words, $k/\|\chi_E\|_N^o \in S_N$.

Next, we prove $x_n \to x$ in measure for all $x_n \in S(L_N^o)$ satisfying $\alpha_n = \langle x_n, u\rangle \to 1$ $(n \to \infty)$. Indeed, first we have

$$\int_E [x_n(t) - x(t)]\,dt = \alpha^{-1}\langle x_n - x, u\rangle \to 0. \tag{3.43}$$

Moreover, for any $\varepsilon > 0$, we can find $\delta > 0$ such that $\mu e < \delta$ implies $\|u|_e\|_N < \varepsilon$. Therefore, from

$$\langle x_n|_{E\setminus e}, u\rangle + \varepsilon > \langle x_n|_{E\setminus e}, u\rangle + \langle x_n, u|_e\rangle = \langle x_n, u\rangle \to 1,$$

we deduce that for all large n,

$$\mu e < \delta \Rightarrow \|x_n|_{E\setminus e}\|_N^o > 1 - \varepsilon. \tag{3.44}$$

Pick $k_n \in K(x_n)$. Then by examining the proof of (3.34), we see that (3.44) implies (3.34). Moreover, (3.44) also implies that $\{k_n\}$ is a bounded set since $M(t)/t \to \infty$ as $t \to \infty$. Therefore, by passing to a subsequence, we may assume $k_n \to k'$. But by the Jensen Inequality,

$$\begin{aligned}\alpha_n = \|\alpha_n x\|_N^o \le k_n^{-1}[1 + \varrho_N(k_n\alpha_n x)] &= \frac{1}{k_n}\left[1 + N\left(\frac{1}{\mu E}\int_E k_n x_n(t)\,dt\right)\mu E\right]\\ &\le k_n^{-1}[1 + \varrho_N(k_n x_n)] = \|x_n\|_N^o = 1.\end{aligned}$$

Letting $n \to \infty$, we obtain $1 = k'^{-1}[1 + \varrho_N(k'x)]$, i.e., $k' \in K_N(x)$. Observing that $x \in \operatorname{Ext} B(L_N^o)$ implies that $K_N(x)$ is a singleton, we deduce that $k_n \to k' = k$.

Applying (3.43), (3.44) and $k_n \to k$, instead of E by $G(i)$, by repeating the proof of the sufficiency in (ii) of Theorem 3.13, we find that $x_n \to x$ in measure.

Finally, we complete the proof by showing that $\varepsilon(L_M) \le 2\limsup_n \|x_n - x\|_N^o \le 8/k < 8/m \to 0$ $(m \to \infty)$. In fact, since $\{x_n\}$ is chosen arbitrarily, by passing to a subsequence if necessary, we may assume $x_n \to x$ μ-a.e. on G. For any $\varepsilon > 0$, there exists $\delta > 0$ such that $e \in \Sigma$ and $\mu e < \delta$ imply $\varrho_N(kx|_e) < \varepsilon$ and $\|x|_e\|_N^o < \varepsilon$. Select $e \in \Sigma$ such that $\mu e < \delta$ and $x_n \to x$ uniformly on $G \setminus e$. Then since

$$1 = \|x_n\|_N = k_n^{-1}[1 + \varrho_N(k_n x_n|_{G\setminus e})] + k_n^{-1}\varrho_N(k_n x_n|_e) \ge \|x_n|_{G\setminus e}\|_N + k_n^{-1}\varrho_N(k^{-1}x_n|_e),$$

we deduce that for all large n, $\varrho_N(k_n x_n|_e) < k\varepsilon$. Since the convexity of M implies

$$\begin{aligned}\varrho_N\left(\frac{k}{4}(x_n - x)\right) \le \varrho_N\left(\frac{k}{4}(x_n - x)|_{G\setminus e}\right) &+ \frac{1}{2}\varrho_N\left(\frac{k - k_n}{2}x_n|_e\right)\\ &+ \frac{1}{4}\varrho_N(k_n x_n|_e) + \frac{1}{4}\varrho_N(kx|_e),\end{aligned}$$

we deduce that

$$\limsup_n \varrho_N\left(\frac{k}{4}(x_n - x)\right) \le 0 + \frac{1}{2}k\varepsilon + \frac{1}{4}k\varepsilon + \frac{1}{4}\varrho_N(kx|_e).$$

Letting $\varepsilon \to 0$ and $\mu e \to 0$, we obtain

$$\lim_n \varrho_N\left(\frac{k}{4}(x_n - x)\right) = 0.$$

Hence, the inequality

$$\|x_n - x\|_N^o \le \frac{4}{k}\left[1 + \varrho_N\left(\frac{k}{4}(x_n - x)\right)\right]$$

implies $\limsup_n \|x_n - x\|_N^o \le 4/k$. ∎

3.6. Ball-packing constants. Let X be a Banach space. The *ball-packing constant* of X is defined by

$$\Gamma_X = \sup\{r > 0 : \text{there exist } x_k \in (1-r)B(X) \text{ with } \|x_i - x_j\| \geq 2r \text{ for } i, j \in \mathbb{N}, i \neq j\},$$

i.e., if $0 < r < \Gamma_X$, then $B(X)$ contains infinitely many disjoint balls with radius r, and when $r > \Gamma_X$, then $B(X)$ contains only finitely many such balls.

PROPOSITION 3.40. *If* $\dim(X) = \infty$, *then* $1/2 \geq \Gamma_X \geq 1/3$.

Proof. For any $r > 1/2$ and $x, y \in (1-r)B(X)$, we have

$$\|x - y\| \leq \|x\| + \|y\| \leq (1-r) + (1-r) < 1 < 2r.$$

Hence, $B(X)$ does not contain more disjoint balls with radius $r > 1/2$ than one, and thus $\Gamma_X \leq 1/2$.

Next, we show $\Gamma_X \geq 1/3$. Indeed, for any fixed $\varepsilon > 0$, set

$$D = \{A \subset B(X) : x, y \in A,\ x \neq y \Rightarrow \|x - y\| > 1 - \varepsilon\}$$

and define the partial order "$\leq$" on D by $A \leq B \Leftrightarrow A \subset B$. Clearly, for any ordered subset D' in D, $E = \bigcup\{A : A \in D'\} \in D$ and $A \leq E$ for all $A \in D'$. By the Zorn Lemma, D has a maximal A'. We claim that A' contains infinitely many elements. In fact, if A' contains only finitely many elements, then $\operatorname{span} A' \neq X$. Therefore, there exists $x \in B(X)$ with $\operatorname{dist}(x, \operatorname{span} A') > 1 - \varepsilon$. But this yields $A' \cup \{x\} \in D$, contradicting the fact that A' is maximal.

Let $C = (2/3)A'$. Then for any $x, y \in C$ with $x \neq y$, we have

$$\|x\|, \|y\| \leq 2/3 < 1 - (1-\varepsilon)/3, \qquad \|x - y\| \geq (2/3)(1-\varepsilon).$$

This shows $\Gamma_X \geq (1-\varepsilon)/3$, and thus $\Gamma_X \geq 1/3$ since $\varepsilon > 0$ is arbitrary. ∎

PROPOSITION 3.41. *Set*

$$d_X = \sup_{\mathbf{x}} \inf_{n \neq m} \{\|x_n - x_m\| : x_n, x_m \in \mathbf{x}\}$$

where $\mathbf{x} = \{x_i\}_{i=1}^{\infty} \subset S(X)$. *Then* $\Gamma_X = d_X/(2 + d_X)$.

Proof. Given $\varepsilon > 0$, pick a sequence $\mathbf{x} = \{x_i\}$ in $S(X)$ with $\|x_i - x_j\| > d_X - \varepsilon$ $(i \neq j)$, and define

$$y_i = \left(1 - \frac{d_X - \varepsilon}{2 + d_X - \varepsilon}\right) x_i \qquad (i \in \mathbb{N}).$$

Then

$$\|y_i\| = 1 - \frac{d_X - \varepsilon}{2 + d_X - \varepsilon} \qquad (i \in \mathbb{N})$$

and for all $i \neq j$,

$$\|y_i - y_j\| > \left(1 - \frac{d_X - \varepsilon}{2 + d_X - \varepsilon}\right)(d_X - \varepsilon) = \frac{2(d_X - \varepsilon)}{2 + d_X - \varepsilon}.$$

Thus,

$$\Gamma_X \geq \frac{d_X - \varepsilon}{2 + d_X - \varepsilon}.$$

Since $\varepsilon > 0$ is arbitrary, we get

$$\Gamma_X \geq \frac{d_X}{2+d_X}.$$

Next, we show the reverse inequality. Since $\dim(X) = \infty$, we immediately have $d_X \geq 1$ and thus, $\frac{d_X}{2+d_X} \geq \frac{1}{3}$. This permits us to consider the case $\Gamma_X > 1/3$ only. For fixed $\varepsilon > 0$, pick $s \in (1/3, \Gamma_X)$ such that

$$\frac{2s}{1-s} > \frac{2\Gamma_X}{1-\Gamma_X} - \varepsilon.$$

Then by the definition of Γ_X, there exist $x_k \in (1-s)B(X)$ $(k \in \mathbb{N})$ such that $\|x_i - x_j\| \geq 2s$ $(i, j \in \mathbb{N}, i \neq j)$. Omitting some elements if necessary, we may assume $\|x_i\| \geq s$ for all $i \in \mathbb{N}$. So, for all $i, j \in \mathbb{N}$, $i \neq j$,

$$1/3 \leq s \leq \|x_i\| \leq 1-s \leq 2/3 \leq 2s \leq \|x_i - x_j\|. \tag{3.45}$$

For fixed $j \in \mathbb{N}$, let $\|x_j\| = (1-t)(1-s)$. Then $t \in (0,1)$ and for any $x_i \neq x_j$,

$$x_i - x_j = tx_i + (1-t)\left(x_i - \frac{1-s}{\|x_j\|}x_j\right).$$

Thus,

$$t\|x_i - x_j\| + (1-t)\|x_i - x_j\| = \|x_i - x_j\| \leq t\|x_i\| + (1-t)\left\|x_i - \frac{1-s}{\|x_j\|}x_j\right\|.$$

It follows from (3.45) that

$$\left\|\frac{1-s}{\|x_j\|}x_j\right\| = 1-s \leq 2s \leq \|x_i - x_j\| \leq \left\|x_i - \frac{1-s}{\|x_j\|}x_j\right\|. \tag{3.46}$$

Take $t' \in [0,1)$ such that $\|x_i\| = (1-t')(1-s)$. Then

$$\begin{aligned}
t'\left\|\frac{1-s}{\|x_j\|}x_j - x_i\right\| &+ (1-t')\left\|\frac{1-s}{\|x_j\|}x_j - x_i\right\| \\
&= \left\|\frac{1-s}{\|x_j\|}x_j - x_i\right\| \\
&= \left\|\frac{t'(1-s)}{\|x_j\|}x_j + (1-t')\left[\frac{1-s}{\|x_j\|}x_j - \frac{1-s}{\|x_i\|}x_i\right]\right\| \\
&\leq t'\left\|\frac{1-s}{\|x_j\|}x_j\right\| + (1-t')\left\|\frac{1-s}{\|x_j\|}x_j - \frac{1-s}{\|x_i\|}x_i\right\|.
\end{aligned}$$

Combining this with (3.46), we get

$$\left\|\frac{1-s}{\|x_j\|}x_j - x_i\right\| \leq \left\|\frac{1-s}{\|x_j\|}x_j - \frac{1-s}{\|x_i\|}x_i\right\|.$$

It follows from (3.46) again that

$$\left\|\frac{x_j}{\|x_j\|} - \frac{x_i}{\|x_i\|}\right\| \geq \frac{2s}{1-s} \qquad (i \neq j)$$

and thus, by the definition of d_X, we obtain $d_X \geq 2s/(1-s)$. Letting $s \to \Gamma_X$, we find

$$d_X \geq \frac{2\Gamma_X}{1-\Gamma_X} \quad \text{or equivalently,} \quad \Gamma_X \leq \frac{d_X}{2+d_X}. \ \blacksquare$$

Now, we calculate the ball-packing constants for Orlicz sequence spaces.

LEMMA 3.42. *Assume $M \in \Delta_2$. Then for any $\delta > 0$ and any sequence $\{x^n\}$ in $S(l_M)$, there exist a subsequence $\{y^n\}$ of $\{x^n\}$ and a subsequence $\{m_k\}$ of $\mathbb{N}$ such that*

(1) $\varrho_M(y^k|_{N\setminus I_k}) < \delta$ $(k \in \mathbb{N})$,
(2) $\varrho_M((y^n - y^m)|_{I_{k-1}}) < \delta$ $(k \in \mathbb{N},\ m, n \geq k)$,
(3) $\varrho_M(y^n|_{I_k \setminus I_{k-1}}) < \delta$ $(k \geq 2,\ n > k)$,

where $I_0 = \emptyset$, $I_k = \{1, 2, \ldots, m_k\}$, $k \in \mathbb{N}$.

Proof. Since for any $n, i \in \mathbb{N}$, $|x^n(i)| \leq M^{-1}(1)$, we may asume, by the diagonal method, that $x^n(i) \to \alpha_i$ as $n \to \infty$ $(i \in \mathbb{N})$. Clearly, $\sum_{i=1}^{\infty} M(\alpha_i) \leq \lim_n \varrho_M(x^n) = 1$.

Let $y^1 = x^1$ and pick $m_1 \in \mathbb{N}$ such that $\varrho_M(y^1|_{\mathbb{N}\setminus I_1}) < \delta$ and $\sum_{i>m_1} M(\alpha_i) < \delta$. Choose $N_1 \in \mathbb{N}$ such that for all $n, m \geq N_1$, $\varrho_M((x^n - x^m)|_{I_1}) < \delta$ and let $y^2 = x^{N_1}$. Then pick $m_2 \in \mathbb{N}$ with $m_2 > m_1$ such that $\varrho_M(y^2|_{I_2}) < \delta$. Since

$$\sum_{i \in I_2 \setminus I_1} M(\alpha_i) \leq \sum_{i > m_1} M(\alpha_i) < \delta,$$

we can choose $N_2 \in \mathbb{N}$ with $N_2 > N_1$ such that for all $n, m \geq N_2$, $\varrho_M((x^n - x^m)|_{I_2}) < \delta$ and $\varrho_M(x^n|_{I_2 \setminus I_1}) < \delta$. Then we set $y^3 = x^{N_2}$. And so on, by induction, we find the required $\{y^n\}$ and $\{m_k\}$. ∎

Let $n \in \mathbb{N}$, $M \in \Delta_2$ and $x \in S(l_M)$. Then there exists a unique $c_x > 0$ such that $\varrho_M(x/c_x) = 1/n$. Define

$$d_n = \sup\{c_x : x \in S(l_M)\}.$$

Furthermore, for each sequence $\mathbf{x} = \{x^n\}$ in $S(l_M)$, we set

$$D_n(\mathbf{x}) = \inf\{\|x^1 + \varepsilon_2 x^2 + \ldots + \varepsilon_n x^n\| : x^1, \ldots, x^n \in \mathbf{x},\ \varepsilon_i = \pm 1\},$$
$$D_n = \sup\{D_n(\mathbf{x}) : \mathbf{x} = \{x^n\} \subset S(l_M)\}.$$

Then we have

LEMMA 3.43. *If $M \in \Delta_2$, then $d_n = D_n$ $(n \in \mathbb{N})$.*

Proof. Given $\varepsilon > 0$, pick $y \in S(l_M)$ such that $c_y > d_n - \varepsilon$. Define

$$x^1 = (y(1), 0, y(2), 0, y(3), 0, y(4), 0, y(5), 0, y(6), 0, \ldots),$$
$$x^2 = (0, y(1), 0, 0, 0, y(2), 0, 0, 0, y(3), 0, 0, \ldots),$$
$$x^3 = (0, 0, 0, y(1), 0, 0, 0, 0, 0, 0, 0, y(2), \ldots), \ldots$$

and $\mathbf{x} = \{x^n\}$. Then for any $x^{k_1}, \ldots, x^{k_n} \in \mathbf{x}$, since

$$\varrho_M\left(\frac{x^{k_1} \pm \ldots \pm x^{k_n}}{d_n - \varepsilon}\right) = n\varrho_M\left(\frac{y}{d_n - \varepsilon}\right) \geq n\varrho_M\left(\frac{y}{c_y}\right) = 1,$$

we have $\|x^{k_1} \pm \ldots \pm x^{k_n}\| \geq d_n - \varepsilon$, i.e., $D_n(\mathbf{x}) \geq d_n - \varepsilon$ and of course, $D_n \geq d_n - \varepsilon$. Letting $\varepsilon \to 0$, we get $D_n \geq d_n$.

Next we prove $D_n \leq d_n$. We only consider the case $n = 2k + 1$ $(k \in \mathbb{N})$; the case $n = 2k$ $(k \in \mathbb{N})$ is proved analogously.

For fixed $\varepsilon > 0$ and $x \in S(l_M)$, we have

$$\varrho_M\left(\frac{x}{d_n + \varepsilon}\right) \leq \frac{d_n}{d_n + \varepsilon}\varrho_M\left(\frac{x}{d_n}\right) \leq \frac{1}{n}(1 - \varepsilon_1),$$

where $\varepsilon_1 = \varepsilon/(d_n+\varepsilon) > 0$. By Lemma 1.40, we can find $\delta > 0$ such that $\sum_{i\in I} M(\alpha_i) \le 1$ and $\sum_{i\in I} M(\beta_i) < \delta$ imply

$$\Big|\sum_{i\in I} M(\alpha_i+\beta_i) - \sum_{i\in I} M(\alpha_i)\Big| < \varepsilon_1/n.$$

Since $M \in \Delta_2$, there exists $c > 0$ such that $0 \le u \le M^{-1}(1)$ implies $M(nu) \le cM(u)$.

By Lemma 3.42, any sequence $\mathbf{x} = \{x^k\}$ in $S(l_M)$ has a subsequence $\{y^k\}$ satisfying

$$\begin{aligned}
\varrho_M(y^p|_{\mathbb{N}\setminus I_k}) &< \delta/c \qquad (k\in\mathbb{N},\ p\le k),\\
\varrho_M((y^p-y^q)|_{I_{k-1}}) &< \delta/c \qquad (k\in\mathbb{N},\ p,q\ge k),\\
\varrho_M(y^p|_{I_k\setminus I_{k-1}}) &< \delta/c \qquad (k\ge 2,\ p>k),
\end{aligned}$$

where $I_k = \{1,\dots,m_k\},\ m_1 < m_2 < \dots$ In the following, we estimate $\|y^1+y^2-y^3+\dots+y^{n-1}-y^n\|$. Since

$$\begin{aligned}
&\varrho_M\bigg(\frac{y^2-y^3+\dots+y^{n-1}-y^n}{d_n+\varepsilon}\bigg|_{I_1}\bigg)\\
&\qquad\le \varrho_M((y^2-y^3+\dots+y^{n-1}-y^n)|_{I_1})\\
&\qquad\le \frac{2}{n-1}\bigg[\varrho_M\bigg(\frac{n-1}{2}(y^2-y^3)|_{I_1}\bigg)+\dots+\varrho_M\bigg(\frac{n-1}{2}(y^{n-1}-y^n)|_{I_1}\bigg)\bigg]\\
&\qquad\le \frac{2c}{n-1}[\varrho_M((y^2-y^3)|_{I_1})+\dots+\varrho_M((y^{n-1}-y^n)|_{I_1})]\\
&\qquad\le \frac{2c}{n-1}\cdot\frac{n-1}{2}\cdot\frac{\delta}{c} = \delta,
\end{aligned}$$

by the choice of δ, we have

$$\begin{aligned}
\varrho_M\bigg(\frac{y^1+y^2-y^3+\dots+y^{n-1}-y^n}{d_n+\varepsilon}\bigg|_{I_1}\bigg) &\le \varrho_M\bigg(\frac{y^1}{d_n+\varepsilon}\bigg|_{I_1}\bigg)+\frac{\varepsilon_1}{n}\\
&\le (1-\varepsilon_1)/n+\varepsilon_1/n = 1/n.
\end{aligned}$$

Furthermore, since

$$\begin{aligned}
&\varrho_M\bigg(\frac{y^1-y^3+\dots+y^{n-1}-y^n}{d_n+\varepsilon}\bigg)\\
&\qquad\le \frac{1}{n-1}[\varrho_M((n-1)y^1|_{I_2})+\varrho_M((n-1)y^3|_{I_2})+\dots+\varrho_M((n-1)y^n|_{I_2})]\\
&\qquad\le \frac{c}{n-1}[\varrho_M(y^1|_{I_2})+\varrho_M(y^3|_{I_2})+\dots+\varrho_M(y^n|_{I_2})]\\
&\qquad\le \frac{c}{n-1}(n-1)\frac{\delta}{c} = \delta,
\end{aligned}$$

by the same reason, we have

$$\varrho_M\bigg(\frac{y^1+y^2-y^3+\dots+y^{n-1}-y^n}{d_n+\varepsilon}\bigg|_{I_2}\bigg) \le \varrho_M\bigg(\frac{y^2}{d_n+\varepsilon}\bigg|_{I_2}\bigg)+\frac{\varepsilon}{n} \le \frac{1}{n}.$$

Similarly, for any $k\ge 3,\ k<n$,

$$\varrho_M\bigg(\frac{y^1+y^2-y^3+\dots+y^{n-1}-y^n}{d_n+\varepsilon}\bigg|_{I_k}\bigg) \le \varrho_M\bigg(\frac{y^k}{d_n+\varepsilon}\bigg|_{I_k}\bigg)+\frac{\varepsilon}{n} \le \frac{1}{n}.$$

Finally, since

$$\varrho_M\left(\frac{y^1+y^2-y^3+\ldots+y^{n-1}}{d_n+\varepsilon}\bigg|_{\mathbb{N}\setminus I_{n-1}}\right)<\delta,$$

we also have

$$\varrho_M\left(\frac{y^1+y^2-y^3+\ldots+y^{n-1}-y^n}{d_n+\varepsilon}\bigg|_{\mathbb{N}\setminus I_{n-1}}\right)\le\varrho_M\left(\frac{y^n}{d_n+\varepsilon}\bigg|_{\mathbb{N}\setminus I_{n-1}}\right)+\frac{\varepsilon}{n}\le\frac{1}{n}.$$

Summing up the above discussion, we obtain

$$\varrho_M\left(\frac{y^1+y^2-y^3+\ldots+y^{n-1}-y^n}{d_n+\varepsilon}\right)\le 1,$$

i.e., $\|y^1+y^2-y^3+\ldots+y^{n-1}-y^n\|\le d_n+\varepsilon$. Since $\{y^k\}$ is a subsequence of $\{x^k\}$, we deduce that $D_n(\mathbf{x})\le d_n+\varepsilon$, and so $D_n\le d_n$ since $\mathbf{x}=\{x^k\}$ and $\varepsilon>0$ are arbitrary. ∎

THEOREM 3.44. *Denote by Γ_M the ball-packing constant of l_M. Then*

(i) $\Gamma_M=d_2/(d_2+2)$ $(M\in\Delta_2)$, *and*
(ii) $\Gamma_M=1/2$ $(M\notin\Delta_2)$.

Proof. (i) is a direct result of Proposition 3.41 and Lemma 3.43. Now, we prove (ii). Suppose $M\notin\Delta_2$. Then by Theorem 1.89, l_M has a subspace isometric to l^∞. Since it is obvious that $d_{l^\infty}=2$, we have $\Gamma_M=1/2$. ∎

THEOREM 3.45. $\Gamma_M<1/2$ *iff* $M\in\Delta_2\cap\nabla_2$.

Proof. If $M\notin\Delta_2$, then by Theorem 3.44, $\Gamma_M=1/2$. If $M\notin\nabla_2$, then by Theorem 1.91, l^1 is an almost isometric copy of l_M. Since it is obvious that $d_{l^1}=2$, we also have $\Gamma_M=1/2$.

If $M\in\Delta_2\cap\nabla_2$, then by Theorem 3.30, l_M is P-convex, and in particular, $d_{l_M}<2$, i.e., $\Gamma_M<1/2$. ∎

Finally, we calculate the ball-packing constant Γ_M^o for l_M^o. First, as in Theorem 3.45, we have

THEOREM 3.46. $\Gamma_M^o<1/2$ *iff* $M\in\Delta_2\cap\nabla_2$.

Assume $M\in\Delta_2$. Then for any $x\in S(l_M^o)$ and $k>1$, there exists a unique $d_{x,k}>0$ such that $\varrho_M(kx/d_{x,k})=(k-1)/2$. Set $d_x=\inf\{d_{x,k}:k>1\}$. Since for any $k'\in K(x)$,

$$\frac{k'-1}{2}=\frac{1}{2}\varrho_M(k'x)>\varrho_M\left(\frac{k'x}{2}\right),$$

we deduce that $d_x<2$. Moreover, for any $k>0$, by Theorem 1.30, $\varrho_M(kx)\ge k-1$, and thus, $d_x>1$. Hence, if we define $d=\sup\{d_x:x\in S(l_M^o)\}$, then $1<d\le 2$.

THEOREM 3.47. *If* $M\in\Delta_2$, *then* $\Gamma_M^o=d/(2+d)$.

Proof. Set $d_{l_M^o}=d_M$; we have to show $d_M=d$. First we claim $d_M\ge d$. Indeed, for any $\varepsilon>0$, there exists $x\in S(l_M^o)$ such that $d_x>d-\varepsilon$, and of course, $d_{x,k}>d-\varepsilon$ for all $k>1$. Set

$$\begin{aligned}
x^1&=(x(1),0,x(2),0,x(3),0,x(4),0,x(5),0,x(6),0,\ldots),\\
x^2&=(0,x(1),0,0,0,x(2),0,0,0,0,0,0,0,x(3),0\ldots),\\
x^3&=(0,0,0,x(1),0,0,0,0,0,0,0,x(2),\ldots),\ldots
\end{aligned}$$

Then $\|x^n\|^o = \|x\|^o = 1$ $(n \in \mathbb{N})$ and for all $n \neq m$ and all $k > 1$,

$$\frac{1}{k}\left[1 + \varrho_M\left(k\frac{x^n - x^m}{d-\varepsilon}\right)\right] = \frac{1}{k}\left[1 + 2\varrho_M\left(\frac{kx}{d-\varepsilon}\right)\right] > \frac{1}{k}\left[1 + 2\varrho_M\left(\frac{kx}{d_{x,k}}\right)\right]$$
$$= \frac{1}{k}[1 + k - 1] = 1.$$

This means $\|x^n - x^m\|^o \geq d - \varepsilon$, and thus, $d_M \geq d$ since ε is arbitrary.

To show $d_M \leq d$, we arbitrarily pick $x^n \in S(l_M^o)$ $(n \in \mathbb{N})$. For any $\varepsilon > 0$, by the definition of d, there exists $k_n > 1$ such that $b_n < d+\varepsilon$, where b_n satisfies $\varrho_M(k_n x^n/b_n) = (k_n - 1)/2$ $(n \in \mathbb{N})$. First we assume that $\{k_n\}$ is unbounded. In this case, we will show that $d + \varepsilon \geq 2$ and thus, $d_M \leq d + \varepsilon$ since we always have $d_M \leq 2$.

Passing to a subsequence if necessary, we may assume $k_n \to \infty$. If $d + \varepsilon < 2$, then by Theorem 1.30,

$$\frac{k_n - 1}{2} = \varrho_M\left(\frac{k_n x^n}{b_n}\right) > \varrho_M\left(\frac{k_n x^n}{d+\varepsilon}\right) > \frac{2}{d+\varepsilon}\varrho_M\left(\frac{k_n x^n}{2}\right)$$
$$\geq \frac{2}{d+\varepsilon}\left[\left\|\frac{k_n x^n}{2}\right\|^o - 1\right] = \frac{2}{d+\varepsilon}\left(\frac{k_n}{2} - 1\right).$$

Letting $n \to \infty$, we find $1 \geq 2/(d+\varepsilon) > 1$, a contradiction.

Next we assume that $\{k_n\}$ is bounded. In this case, we may assume $k_n \to k \geq 1$ as $n \to \infty$. Since $M \in \Delta_2$, we can find $c > 1$ such that

$$0 \leq u \leq M^{-1}(1) \Rightarrow M(ku) \leq cM(u). \tag{3.47}$$

By the same reason, there exists $\delta \in (0, \varepsilon)$ such that

$$\varrho_M(x) \leq c,\ \varrho_M(y) \leq \delta \Rightarrow \varrho_M(x+y) \leq \varrho_M(x) + \varepsilon. \tag{3.48}$$

Moreover, since $\varrho_M(x^n) \leq \|y^n\|^o = 1$ $(n \in \mathbb{N})$, by Lemma 3.42, $\{x^n\}$ has a subsequence, denoted by $\{x^n\}$ again, such that

$$\varrho_M(x^j|_{\mathbb{N}\setminus I_j}) < \delta/c \qquad (j \in \mathbb{N}), \tag{3.49}$$
$$\varrho_M((x^n - x^m)|_{I_{j-1}}) < \delta/c \qquad (2 \leq j \leq n,\ m \geq j), \tag{3.50}$$
$$\varrho_M(x^n|_{I_j \setminus I_{j-1}}) < \delta/c \qquad (j \geq 2,\ n > j), \tag{3.51}$$

where $I_j = \{1, \ldots, m_j\}$ $(j \in \mathbb{N})$ and $m_1 < m_2 < \ldots$

Pick $m, n \in \mathbb{N}$ with $n < m$ large enough such that

$$|k_n - k| < \delta, \qquad |k_m - k| < \delta. \tag{3.52}$$

We estimate $\|x^n - x^m\|^o$. By (3.47) and (3.50), we have

$$\varrho_M\left(\frac{k}{d+\varepsilon}(x^n - x^m)|_{I_{n-1}}\right) < c\varrho_M((x^n - x^m)|_{I_{n-1}}) < \delta < \varepsilon. \tag{3.53}$$

By (3.47) and (3.51), we have

$$\varrho_M\left(\frac{k}{d+\varepsilon}x^m|_{I_n \setminus I_{n-1}}\right) < c\varrho_M(x^m|_{I_n \setminus I_{n-1}}) < \delta.$$

It follows from (3.48) that

$$\varrho_M\left(\frac{k}{d+\varepsilon}(x^n - x^m)|_{I_n \setminus I_{n-1}}\right) < \varrho_M\left(\frac{k}{d+\varepsilon}x^n|_{I_n \setminus I_{n-1}}\right) + \varepsilon. \tag{3.54}$$

But (3.52) implies

$$\varrho_M\left(\frac{k}{d+\varepsilon}x^n|_{I_n\setminus I_{n-1}}\right) \le |k-k_n|\varrho_M\left(\frac{k}{d+\varepsilon}x^n|_{I_n\setminus I_{n-1}}\right) \le \delta\varrho_M(x^n) \le \delta,$$

so, by (3.48),

$$\varrho_M\left(\frac{k}{d+\varepsilon}x^n|_{I_n\setminus I_{n-1}}\right) \le \varrho_M\left(\frac{k_n}{d+\varepsilon}x^n|_{I_n\setminus I_{n-1}}\right) + \varepsilon.$$

Combining this with (3.54) and $b_n < d+\varepsilon$, we obtain

$$\begin{aligned}(3.55)\quad \varrho_M\left(\frac{k}{d+\varepsilon}(x^n-x^m)|_{I_n\setminus I_{n-1}}\right) &\le \varrho_M\left(\frac{k_n}{d+\varepsilon}x^n|_{I_n\setminus I_{n-1}}\right) + 2\varepsilon\\ &\le \varrho_M\left(\frac{k_n}{b_n}x^n|_{I_n\setminus I_{n-1}}\right) + 2\varepsilon \le \frac{k_n-1}{2} + 2\varepsilon\\ &= \frac{k-1}{2} + \frac{k_n-k}{2} + 2\varepsilon \le \frac{k-1}{2} + \frac{5}{2}\varepsilon.\end{aligned}$$

Finally, by (3.47), (3.51) and (3.48),

$$\varrho_M\left(\frac{k}{d+\varepsilon}(x^n-x^m)|_{\mathbb{N}\setminus I_n}\right) \le \varrho_M\left(\frac{k}{d+\varepsilon}x^m|_{\mathbb{N}\setminus I_n}\right) + \varepsilon,$$

and so, by repeating the deduction of (3.55), we also have

$$(3.56)\qquad \varrho_M\left(\frac{k}{d+\varepsilon}(x^n-x^m)|_{\mathbb{N}\setminus I_n}\right) \le \frac{k-1}{2} + \frac{5}{2}\varepsilon.$$

From (3.53), (3.55), (3.56) and Theorem 1.30, we obtain

$$\begin{aligned}\left\|\frac{x^n-x^m}{d+\varepsilon}\right\|^o &\le \frac{1}{k}\left[1+\varrho_M\left(\frac{k}{d+\varepsilon}(x^n-x^m)\right)\right]\\ &\le \frac{1}{k}[1+k-1+6\varepsilon] = 1+6\varepsilon/k \le 1+6\varepsilon.\end{aligned}$$

This shows that $\inf\{\|x^n-x^m\|^o : n\ne m\} \le (1+6\varepsilon)(d+\varepsilon)$. Since $\{x^n\}$ in $S(l^o_M)$ and $\varepsilon>0$ are arbitrary, we deduce that $d_M \le d$ for either case. ■

COROLLARY 3.48. *If $M\in\Delta_2$ and $\|x\|^o = \alpha M^{-1}(\varrho_M(x))$ $(x\in l^o_M)$, then*

$$d_M = \frac{1}{\alpha}\inf_{k>1}\left\{\frac{k}{M^{-1}((k-1)/2)}\right\}.$$

Proof. From the equation

$$\frac{k-1}{2} = \varrho_M(kx/d) = M\left(\frac{1}{\alpha}\|kx/d\|^o\right) = M\left(\frac{k}{\alpha d}\right)$$

we deduce that

$$d_{x,k} = \frac{k}{\alpha}\left[M^{-1}\left(\frac{k-1}{2}\right)\right]^{-1}.$$

Therefore,

$$d_n = \sup_{\|x\|^o=1}\inf_{k>1} d_{x,k} = \frac{1}{\alpha}\inf_{k>1}\left\{k/M^{-1}\left(\frac{k-1}{2}\right)\right\}. \ ■$$

COROLLARY 3.49. *If* $X = l^p$ $(1 < p < \infty)$, *then*

$$d_X = 2^{1/p}, \qquad \Gamma_X = \frac{1}{1+2^{1-1/p}}.$$

Proof. For any $x \in l^p$, $\|x\|^o = q^{1/q}\|x\|_{l^p} = q^{1/q}M^{-1}(\varrho_M(x))$, where $M(u) = |u|^p/p$ and $1/p + 1/q = 1$. Hence, by Corollary 3.48,

$$d_X = \frac{1}{q^{1/q}p^{1/p}} \inf_{k>1} k\left(\frac{k-1}{2}\right)^{1/p} = 2^{1/p}. \ \blacksquare$$

REMARK. Z. Ren [202] estimated the ball-packing constants in many ways. For instance, he obtained

(1) $\Gamma_{L_M} \ge \max\left\{\dfrac{1}{1+2\alpha_M}, \dfrac{1}{1+1/\beta_M}\right\}$,

(2) $\Gamma_{L^o_M} \ge \max\left\{\dfrac{1}{1+\alpha_N}, \dfrac{1}{1+1/\beta_N}\right\}$,

(3) $\Gamma_{l_M} \ge \dfrac{1}{1+2\alpha^o_M}$,

(4) $\Gamma_{l^o_M} \ge \dfrac{1}{1+1/\beta^o_M}$,

where N is the complementary function of M and

$$\alpha_M = \liminf_{u\to\infty} \frac{M^{-1}(u)}{M^{-1}(2u)}, \qquad \beta_M = \limsup_{u\to\infty} \frac{M^{-1}(u)}{M^{-1}(2u)},$$
$$\alpha^o_M = \liminf_{u\to 0} \frac{M^{-1}(u)}{M^{-1}(2u)}, \qquad \beta^o_M = \limsup_{u\to 0} \frac{M^{-1}(u)}{M^{-1}(2u)}.$$

H. Hudzik & T. Landes [123] estimated the ball-packing constants in a quite different way, namely, they showed that

$$2^{1/q_0} \le \frac{1}{\widetilde{g}_M^{-1}(1/2)} \le d_{l_M} \le \frac{1}{(f^0_M)^{-1}(1/2)} \le 2^{1/p^0},$$
$$d_{L_M} \ge \max\left\{\sup_{u>0} \frac{u}{M^{-1}\left(\frac{1}{2}M(u)\right)}, \sup_{u>0} \frac{2u}{M^{-1}(2M(u))}\right\}$$
$$\ge \max\left\{\frac{1}{g_M^{-1}(1/2)}, \frac{2}{\widetilde{f}_M^{-1}(2+0)}\right\} \ge \max\{2^{1/q}, 2^{1-1/p_\infty}\},$$

where it is assumed that $M(1) = 1$ and

$$f^0_M(u) = \sup_{0<v<1} \frac{M(uv)}{M(v)}, \qquad \widetilde{g}_M(u) = \liminf_{v\to 0+} \frac{M(uv)}{M(v)},$$
$$g_M(u) = \inf_{v>0} \frac{M(uv)}{M(v)}, \qquad \widetilde{f}_M(u) = \limsup_{v\to\infty} \frac{M(uv)}{M(v)},$$

and

$$\overline{q} = \sup_{t>0} \frac{tp(t)}{M(t)}, \quad p^0 = \inf_{0<t\le 1} \frac{tp(t)}{M(t)}, \quad p_\infty = \liminf_{t\to\infty} \frac{tp(t)}{M(t)}, \quad q_0 = \limsup_{t\to 0+} \frac{tp(t)}{M(t)}.$$

Notes and remarks. In the theory of general Banach spaces, the main properties mentioned in this chapter have the implications shown in Figure 3.1.

Table 3.1

M	L_M	l_M	L_M^o	l_M^o
UNS	Δ_2, ∇_2	Δ_2, ∇_2	Δ_2, ∇_2	Δ_2, ∇_2
NS	Δ_2	Δ_2	$\varDelta_M < \infty$	$\delta_M < \infty$
WNS	Δ_2	Δ_2	no condition	no condition
UN-l_n^1 $(n \geq 2)$	Δ_2, ∇_2	Δ_2, ∇_2	Δ_2, ∇_2	Δ_2, ∇_2
LUN-l_n^1 $(n \geq 2)$	Δ_2	Δ_2	∇_2	∇_2
LUN-S	Δ_2	Δ_2	no condition	no condition
N-l_n^1 $(n \geq 2)$	Δ_2	Δ_2	no condition	no condition
RNP	Δ_2	Δ_2	Δ_2	Δ_2
KMP	Δ_2	Δ_2	Δ_2	Δ_2
WCG	Δ_2	Δ_2	Δ_2	Δ_2
H	Δ_2, SC	Δ_2	Δ_2, SC	Δ_2
UKK	Δ_2, UC	Δ_2	Δ_2, UC	Δ_2
NUC	Δ_2, UC	Δ_2, ∇_2	Δ_2, UC	Δ_2, ∇_2
BSP	Δ_2, ∇_2	Δ_2, ∇_2	Δ_2, ∇_2	Δ_2, ∇_2
P-convex	Δ_2, ∇_2	Δ_2, ∇_2	Δ_2, ∇_2	Δ_2, ∇_2
Q-convex	Δ_2, ∇_2	Δ_2, ∇_2	Δ_2, ∇_2	Δ_2, ∇_2
Superreflexive	Δ_2, ∇_2	Δ_2, ∇_2	Δ_2, ∇_2	Δ_2, ∇_2
Subreflexive	Δ_2, ∇_2	Δ_2, ∇_2	Δ_2, ∇_2	Δ_2, ∇_2
$\left(\begin{array}{c}\text{Girth} = 4 \\ \text{not attainable}\end{array}\right)$	$\Delta_2 \setminus \nabla_2$	$\Delta_2 \setminus \nabla_2$	$\notin \Delta_2$ or $\notin \nabla_2$	$\notin \Delta_2$ or $\notin \nabla_2$
Flat	$\notin \Delta_2$	$\notin \Delta_2$	never	never
Strongly rough	impossible	impossible	impossible	impossible
Rough	$\Delta_2 \setminus \nabla_2$	$\Delta_2 \setminus \nabla_2$	$\notin \nabla_2$	$\notin \nabla_2$
Pointwise rough	$\notin \nabla_2$	$\notin \nabla_2$	$\notin \nabla_2$	$\notin \nabla_2$

Table 3.1 summarizes the main results in this chapter. In the table, "UC" means that M is uniformly convex, "SC" denotes that M is strictly convex, and

$$\varDelta_M = \sup\{b/a : [a,b] \text{ is a SAI of } M,\ b \geq 1\},$$
$$\delta_M = \sup\{b/a : [a,b] \text{ is a SAI of } M,\ b \leq 1\}.$$

T. Landes [158] and D. V. Dulst & V. D. Valk [76] first discussed the normal structure of l_M and obtained Theorem 3.8 for l_M and Theorem 3.11 respectively. Theorem 3.8 for L_M was deduced similarly by the author. But the problem for L_M^o is a rather tough task. It was not until 1990 that T. Wang & B. Wang [252, 253] solved the problem for l_M^o. Using their work, S. Chen & Y. Duan [27] gave Theorems 3.6, 3.7 finishing the discussion. To find the criterion for uniformly normal structure had been open until 1992 when S. Chen

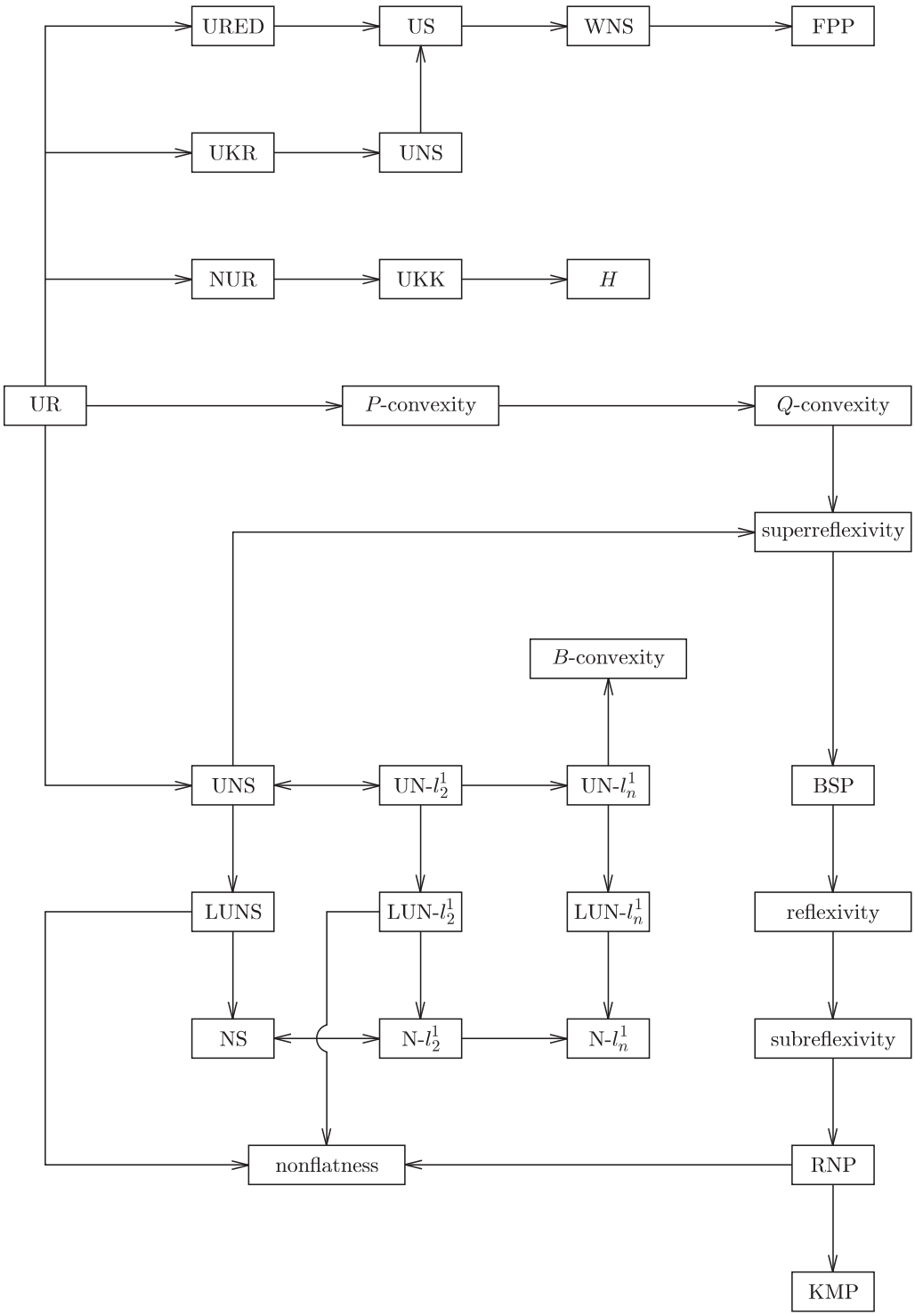
URED
US
WNS
FPP
UKR
UNS
NUR
UKK
H
UR
P-convexity
Q-convexity
superreflexivity
B-convexity
UNS
UN-l_2^1
UN-l_n^1
BSP
LUNS
LUN-l_2^1
LUN-l_n^1
reflexivity
NS
N-l_2^1
N-l_n^1
subreflexivity
nonflatness
RNP
KMP

Fig. 3.1

& H. Sun [43] obtained Theorem 3.1 for L_M, and after that, using that result, T. Wang & Z. Shi [241] solved the problem for L_M^o.

The criteria of the H-property were given by S. Chen & Y. Wang [47] and C. Wu, S. Chen & Y. Wang [283] and partly by H. Hudzik [111]. Recently, R. Płuciennik, T. Wang & Y. Zhang [193] considered the problem more precisely and obtained all the criteria for H-points and denting points. The results for UKK and NUC were given by T. Wang & Z. Shi [243] while the G-property was studied by T. Wang [220].

Non-squareness and non-l_n^1 property were considered by many mathematicians including S. Chen [14, 20], S. Chen & Y. Wang [48], M. Denker & R. Kombrink [67], R. Grząślewicz, H. Hudzik & W. Orlicz [86], H. Hudzik [99, 100], K. Sundaresan [211], Y. Wang [265], Y. Wang & S. Chen [268] and C. Wu, S. Chen & Y. Wang [284]. The pointwise property was then considered by T. Wang, Z. Shi & Y. Li [250].

Theorems 3.30, 3.32, 3.33, 3.35 are selected from T. Wang & Z. Shi [242], Y. Ye, M. He & R. Płuciennik [304], T. Wang [221, 222], A. J. Pach, M. A. Smith & B. Turett [185], A. Kamińska [140], Y. Wang & S. Chen [268] and C. Wu, S. Chen & Y. Wang [284], while Theorems 3.36–3.39 are picked from Y. Cui & T. Wang [60], Finally, all results on the interesting ball-packing problem are due to Y. Ye [301] and T. Wang [223].

4. Some applications of geometry of Orlicz spaces

In this chapter, we present several examples of applications of geometry of Orlicz spaces in best approximation and optimal control theory.

4.1. Best approximation. Let X be a Banach space, C be a subset of X and x be an element in X. If there exists $y \in C$ such that

$$\|x - y\| = \inf\{\|x - c\| : c \in C\}$$

then y is called a *best approximant* of x in C, and denoted by $y \in \pi(x|C)$. The set-valued mapping $P_C : x \to \pi(x|C)$ is called a *metric projection.* In particular, if P_C is a single-valued mapping, then it is called a *best approximation operator*, denoted by $\pi(\cdot|C)$.

THEOREM 4.1. *Suppose $M \in \Delta_2$ and M is smooth (i.e., p is continuous). Let C be a convex subset of L_M^o, $u \in C$ and $x \in L_M^o \setminus C$. Then $u \in \pi(x|C)$ iff for any $w \in C$ and $k \in K(x-u)$,*

$$\int_G [u(t) - w(t)]p(k|x(t) - u(t)|)\mathrm{sign}[x(t) - u(t)]\, dt \geq 0.$$

Proof. *Necessity.* Let $u \in \pi(x|C)$ and $w \in C$. Set

$$h(\gamma) = (1-\gamma)u + \gamma w, \qquad \gamma \in [0,1].$$

Then $h(\gamma) \in C$ since C is convex. Define

$$\psi(\gamma) = \|h(\gamma) - x\|^o = \|(u-x) + \gamma(w-u)\|^o, \qquad \gamma \in [0,1].$$

Then by the definition of $\pi(x|C)$, $\psi(\gamma) \geq \psi(0)$ for all $\gamma \in (0,1]$. Noticing that L_M^o is smooth by Theorem 2.52, we have

$$\begin{aligned} 0 &\leq \lim_{\gamma\to 0+}[\psi(\gamma) - \psi(0)]/\gamma = \lim_{\gamma\to 0}[\|(u-x) + \gamma(w-u)\|^o - \|u-x\|^o]/\gamma \\ &= \langle f(u-x), w-u\rangle, \end{aligned}$$

where $f(u-x)$ is the Gateaux derivative of $\|\cdot\|^o$ at $u-x$. But $M \in \Delta_2$ and the smoothness of M imply $\varrho_N(p(k|x-u|)) = 1$ for all $k \in K(x-u)$, and so, by Theorem 2.51,

$$f(u-x) = p(k|u-x|)\mathrm{sign}(u-x).$$

It follows that

$$0 \leq \langle f(u-x), w-u\rangle = \langle p(k|u-x|)\mathrm{sign}(u-x), w-u\rangle.$$

Sufficiency. Since $\varrho_N(p(k|x-u|)) = 1$ for all $k \in K(x-u)$, by (1.9), Theorem 1.29 and the hypothesis, for any $w \in C$,

$$\|x-u\|^o = \langle p(k|x-u|)\mathrm{sign}(x-u), x-u\rangle \le \langle p(k|x-u|)\mathrm{sign}(x-u), x-u+u-w\rangle$$
$$\le \|p(k|x-u|)\|_N \|x-w\|^o = \|x-w\|^o,$$

i.e., $u \in \pi(x|C)$. ■

COROLLARY 4.2. *Suppose $M \in \Delta_2$ and M is smooth. Let L be a linear subspace of L_M^o, $u \in L$ and $x \in L_M^o \setminus L$. Then $u \in \pi(x|L)$ iff for all $w \in L$,*

$$\int_G w(t)p(k|x(t)-u(t)|)\mathrm{sign}[x(t)-u(t)]\,dt = 0,$$

where $k \in K(x-u)$.

Proof. $\Leftarrow$ For any $w \in L$, since L is linear, we have $w-u \in L$. Therefore, by Theorem 4.1, $u \in \pi(x|L)$.

$\Rightarrow$ Since by Theorem 4.1, the functional $p(k|x-u|)\mathrm{sign}(x-u)$ is nonnegative on the linear space L, it must be zero on L. ■

In the same way as in the proof of Theorem 4.1, we obtain

THEOREM 4.3. *Let $M \in \Delta_2$ and M be smooth. Then for any convex subset C in $L_M, u \in C$ and $x \in L_M \setminus C$, we have $u \in \pi(x|C)$ iff for all $w \in C$,*

$$\int_G [u(t)-w(t)]p\left(\frac{|x(t)-u(t)|}{\|x-u\|}\right)\mathrm{sign}[x(t)-u(t)]\,dt \ge 0.$$

Theorem 4.3 yields the following

COROLLARY 4.4. *Let $M \in \Delta_2$ and M be smooth. Then for any subspace L of $L_M, u \in L$ and $x \in L_M \setminus L$, we have $u \in \pi(x|L)$ iff for all $w \in L$,*

$$\int_G w(t)p\left(\frac{|x(t)-u(t)|}{\|x-u\|}\right)\mathrm{sign}[x(t)-u(t)]\,dt = 0.$$

COROLLARY 4.5. *Let C be a convex subset of L^p $(1<p<\infty)$, $u \in C$ and $x \in L^p \setminus C$. Then $u \in \pi(x|C)$ iff for all $w \in C$,*

$$\langle |x-u|^{p-1}\mathrm{sign}(x-u), u-w\rangle \ge 0.$$

COROLLARY 4.6. *Let L be a subspace of L^p $(1<p<\infty)$, $u \in C$ and $x \in L^p \setminus L$. Then $u \in \pi(x|L)$ iff for all $w \in L$,*

$$\langle |x-u|^{p-1}\mathrm{sign}(x-u), u-w\rangle = 0.$$

It is well known that $\pi(\cdot|C)$ is a single-valued mapping for each convex subset C in a Banach space X iff X is reflexive and rotund. But that condition does not guarantee the continuity of $\pi(\cdot|C)$. However, for Orlicz spaces, it does.

PROPOSITION 4.7. *Let X be rotund and have the H-property. Then for any locally weakly sequentially compact, closed convex subset C of X, $\pi(\cdot|C)$ is continuous.*

Proof. For any $x \in X \setminus C$, take $u_n \in C$ such that $\lim_n \|x-u_n\| = d(x,C)$. Since C is locally weakly sequentially compact, $\{u_n\}$ has a subsequence $\{v_k\}$ weakly convergent to $u \in X$. Since C is closed and convex, we deduce that $u \in C$. Moreover, since $\|x-u\| \le \liminf_n \|x-v_n\| = d(x,C)$, we find that $u \in \pi(x|C)$. Furthermore, since X is rotund, we have $\pi(x|C) = \{u\}$.

Now, let $x, x_n \in X \setminus C$ and $\|x_n - x\| \to 0$ $(n \to \infty)$. Set $\pi(x|C) = \{u\}$, $\pi(x_n|C) = \{u_n\}$; we have to show $u_n \to u$ $(n \to \infty)$. Indeed, observing that

$$(4.1) \quad |\,\|u_n - x_n\| - \|u - x\|\,| \le |\,\|u - x_n\| - \|u - x\|\,| + |\,\|u_n - x_n\| - \|u_n - x\|\,| \\ \le 2\|x_n - x\| \to 0 \qquad (n \to \infty),$$

we see that $\{u_n\}$ is a bounded set, whence it has a subset $\{u_{n_k}\}$ weakly convergent to some point $v \in C$. Hence,

$$\|v - x\| \le \liminf_k \|u_{n_k} - x_{n_k}\| = \|u - x\|.$$

This implies that $v = u$ since X is rotund. Moreover, by (4.1) and the definition of the H-property, we have $u_{n_k} - x_{n_k} \to u - x$ as $k \to \infty$, i.e., $u_{n_k} \to u$. Since $\{x_n\}$ is arbitrary, we obtain $u_n \to u$. ∎

By Proposition 4.7 and Theorem 3.14, we have the following

THEOREM 4.8. *Let $M \in \Delta_2$ and M be strictly convex. Then for any locally weakly sequentially compact closed convex subset C of L_M or L_M^o, the mapping $\pi(\cdot|C)$ is continuous.*

THEOREM 4.9. *Let $X = L_M$ or L_M^o. Then $\pi(\cdot|C)$ is continuous for all closed convex subsets C in X iff X is reflexive and rotund.*

Next, we discuss the monotonicity of $\pi(\cdot|C)$. Recall that for any closed convex lattice C in L^p $(1 < p < \infty)$, $\pi(\cdot|C)$ is monotone, i.e., $x, y \in L^p$, $x(t) \ge y(t)$ μ-a.e. implies $u(t) \ge v(t)$ μ-a.e., where $u \in \pi(x|C)$ and $v \in \pi(y|C)$. The following example shows that this is not true for general Orlicz spaces.

EXAMPLE 4.10. Let $G = [0, 8]$ and $\Sigma' = \{\emptyset, G\}$. Then Σ' is a subring of Σ, and a function defined on G is Σ'-measurable iff it is a constant. Define

$$p(t) = \begin{cases} t/5600, & 0 \le t < 10, \\ 1/112, & 10 \le t < 50, \\ 3/140, & 50 \le t < 55, \\ 3/112, & 55 \le t < 57, \\ 5/112, & 57 \le t < 100, \\ t, & 100 \le t. \end{cases}$$

Then $M(u) = \int_0^{|u|} p(t)\,dt$ is an Orlicz function and $M \in \Delta_2 \cap \nabla_2$. Let C be the set of Σ'-measurable functions on G. Then C is a closed convex lattice in L_M. Define

$$u(t) = \begin{cases} 55, & 0 \le t < 2, \\ -10, & 2 \le t \le 8, \end{cases} \qquad w(t) = \begin{cases} 55, & 0 \le t < 1, \\ 3285/68, & 1 \le t < 2, \\ -10, & 2 \le t \le 8. \end{cases}$$

Then $u \ge w$ and $u \ne w$. We will verify that $\pi(\cdot|C)$ is not monotone by showing $x(t) < y(t)$ on G, where $x \in \pi(u|C)$ and $y \in \pi(w|C)$.

First we show $x(t) \le 0$ on G. Indeed, by a simple calculation, we have $\varrho_M(u) = 1$, and so $\|u - 0\| = \|u\| = 1$. On the other hand, since it is easy to calculate that $\varrho_M(u - \alpha\chi_G) > 1$ for any $\alpha > 0$, we deduce that $x(t) \le 0$ on G.

Next, let $a = 65/68$ and $b = 35/68$. Then we can calculate that $\varrho_M(|w - b\chi_G|/a) = 1$ and for any $c \neq b$, $\varrho_M(|w - c\chi_G|/a) > 1$, whence $\|w - b\chi_G\| = a$ and $\|w - c\chi_G\| > a$ for all $c \neq b$. This means $y(t) = b\chi_G(t) > 0$ on G, and so $x(t) < y(t)$ on G.

THEOREM 4.11. *Suppose $M \in \Delta_2$ and that M is strictly convex and smooth. Then for any closed convex lattice C in L_M, $d(u, C) = d(w, C)$ and $u \geq w$ μ-a.e. imply $x(t) \geq y(t)$ μ-a.e., where $x \in \pi(u|C)$ and $y \in \pi(w|C)$.*

Proof. Without loss of generality, we assume $u, w \in L_M \setminus C$. Let $z(t) = \max\{x(t), y(t)\}$ and $E = \{t \in G : x(t) < y(t)\}$. Then

$$g(\gamma) = (1-\gamma)x + \gamma z = x + \gamma(y - x)|_E \qquad (\gamma \in [0,1])$$

and

$$\psi(\gamma) = \|u - g(\gamma)\| = \|(u - x) + \gamma(x - y)|_E\| \qquad (\gamma \in [0,1]).$$

Then, by the smoothness of L_M, $x \in \pi(u|C)$, $g(\gamma) \in C$ and $\gamma \in [0,1]$ imply

$$\psi'(0) = \lim_{\gamma \to 0} \frac{\psi(\gamma) - \psi(0)}{\gamma} = \lim_{\gamma \to 0} \frac{\|u - g(\gamma)\| - \|u - x\|}{\gamma} \geq 0.$$

This shows that

$$\langle f(u - x), (x - y)|_E \rangle = \psi'(0) \geq 0,$$

where $f(u - x)$ is the supporting functional of $u - x$. Consequently, by Theorem 2.49,

$$\left\langle p\left(\frac{|u - x|}{\|u - x\|}\right) \operatorname{sign}(u - x), (x - y)|_E \right\rangle \leq 0. \tag{4.2}$$

Similarly, if we set $h(t) = \min\{x(t), y(t)\}$ and

$$\begin{aligned} f(\gamma) &= (1-\gamma)y + \gamma h = y + \gamma(x - y)|_E, \\ \varphi(\gamma) &= \|w - f(\gamma)\| = \|(w - y) + \gamma(y - x)|_E\| \qquad (\gamma \in [0,1]), \end{aligned}$$

then since $\varphi'(\gamma) \geq 0$,

$$\left\langle p\left(\frac{|w - y|}{\|w - y\|}\right) \operatorname{sign}(w - y), (y - x)|_E \right\rangle \geq 0.$$

Combining this with (4.2), we obtain

$$\begin{aligned} \int_E p\left(\frac{|w(t) - y(t)|}{\|w - x\|}\right) \operatorname{sign}[w(t) - y(t)][y(t) - x(t)]\, dt \\ \geq \int_E p\left(\frac{|u(t) - x(t)|}{\|u - x\|}\right) \operatorname{sign}[u(t) - x(t)][y(t) - x(t)]\, dt. \end{aligned} \tag{4.3}$$

Recalling that $w(t) \leq u(t)$ μ-a.e. on G, we get

$$w(t) - y(t) < u(t) - x(t) \qquad \mu\text{-a.e. on } E.$$

Thus,

$$\operatorname{sign}[w(t) - y(t)] \leq \operatorname{sign}[u(t) - x(t)] \qquad \mu\text{-a.e. on } E.$$

Moreover, by $\|u - x\| = \|w - y\|$ and the strict monotonicity of p, we have

$$p\Big(\frac{|w(t)-y(t)|}{\|w-y\|}\Big)\operatorname{sign}[w(t)-y(t)] < p\Big(\frac{|u(t)-x(t)|}{\|u-x\|}\Big)\operatorname{sign}[w(t)-x(t)].$$

It follows from (4.3) that $\mu E = 0$, i.e., $x(t) \geq y(t)$ μ-a.e. on G. ∎

4.2. Predictors. Let (Ω, Σ, p) be a probability space, $\{\Sigma_n\}$ be a monotone sequence of σ-subfields in Σ, $\Sigma_1 \subset \Sigma_2 \subset \ldots \subset \Sigma_\infty = \bigcup_n \Sigma_n$ or $\Sigma_1 \supset \Sigma_2 \supset \ldots \supset \Sigma_\infty = \bigcap_n \Sigma_n$. Then by the Doob Theorem, for each random variable β in $L^2(\Omega)$,

$$\|E(\beta|\Sigma_n) - E(\beta|\Sigma_\infty)\|_{L^2} \to 0 \qquad (n \to \infty),$$

where $E(\beta|\Sigma_n)$ is the conditional expectation of β on Σ_n. Moreover, it is well known that $E(\beta|\Sigma_n) = \pi(\beta|C_n)$ $(n = 1, 2, \ldots, \infty)$, where $C_n = \{x \in L^2(\Omega) : x \text{ is } \Sigma_n\text{-measurable}\}$, and $C_\infty = \bigcup_n C_n$ when $C_1 \subset C_2 \subset \ldots$, while $C_\infty = \bigcap_n C_n$ when $C_1 \supset C_2 \supset \ldots$

The following two theorems are generalizations of the Doob Theorem.

THEOREM 4.12. *Let X be a reflexive rotund space with the H-property. Then for any closed convex sets $C_1 \subset C_2 \subset \ldots \subset C_\infty = \overline{\bigcup_n C_n}$ or $C_1 \supset C_2 \supset \ldots \supset C_\infty = \bigcap_n C_n$ in X and any $x \in X$,*

$$\|\pi(x|C_n) - \pi(x|C_\infty)\| \to 0 \qquad (n \to \infty).$$

Proof. First we assume $C_n\uparrow$. Then

$$\|x - \pi(x|C_1)\| \geq \|x - \pi(x|C_2)\| \geq \ldots \geq \|x - \pi(x|C_\infty)\|.$$

Hence,

$$r = \lim_n \|x - \pi(x|C_n)\| \geq \|x - \pi(x|C_\infty)\|.$$

We claim $r = \|x - \pi(x|C_\infty)\|$. Indeed, since $\pi(x|C_\infty) \in C_\infty = \overline{\bigcup_n C_n}$, we may find $u_n \in C_n$ such that $u_n \to \pi(x|C_\infty)$ as $n \to \infty$. Observe that $u_n \in C_n$ implies $\|x - \pi(x|C_n)\| \leq \|x - u_n\|$; by letting $n \to \infty$, we get $r \leq \|x - \pi(x|C_\infty)\|$. Next, by noticing that

$$\|\pi(x|C_n)\| \leq \|x - \pi(x|C_n)\| + \|x\| \leq \|x - \pi(x|C_1)\| + \|x\|,$$

we deduce that $\{\pi(x|C_n)\}$ is a bounded set. Therefore, the reflexivity of X implies the existence of a subsequence $\{\pi(x|C_{n_k})\}$ of $\{\pi(x|C_n)\}$ such that $\pi(x|C_{n_k}) \to u$ weakly. Since C_∞ is closed and convex, it is weakly closed, and so $u \in C_\infty$. Consequently,

$$\|x - u\| \leq \lim_k \|x - \pi(x|C_{n_k})\| = \|x - \pi(x|C_\infty)\|.$$

Moreover, since X is rotund, we have $u = \pi(x|C_\infty)$. Thus, by the H-property, $x - \pi(x|C_{n_k}) \to x - \pi(x|C_\infty)$, i.e., $\pi(x|C_{n_k}) \to \pi(x|C_\infty)$. Since in the above discussion, $\{C_n\}$ can by replaced be any of its subsequences, we finally obtain $\pi(x|C_n) \to \pi(x|C_\infty)$.

Now, we assume $C_n\downarrow$. Clearly, $\{\pi(x|C_n)\}$ is bounded since $\|x - \pi(x|C_n)\| \leq \|x - \pi(x|C_\infty)\|$ for all $n \in \mathbb{N}$. Therefore, $\{\pi(x|C_n)\}$ has a subsequence $\{\pi(x|C_{n_k})\}$ convergent to some point $v \in X$ weakly. Since $v \in \bigcup_{n=m}^\infty C_n = C_m$ for any $m \in \mathbb{N}$, we find $v \in C_\infty$. Hence, by the rotundity of X and $\|x - v\| \leq \lim_k \|x - \pi(x|C_{n_k})\| \to \|x - \pi(x|C_\infty)\|$, we deduce that $v = \pi(x|C_\infty)$. So, $\|x - \pi(x|C_{n_k})\| \to \|x - \pi(x|C_\infty)\|$. By the H-property, $\pi(x|C_{n_k}) \to \pi(x|C_\infty)$. ∎

Since reflexive rotund Orlicz spaces are LUR, and so they have the H-property, we get the following

COROLLARY 4.13. *If L_M is reflexive and rotund, then for any closed convex sets $C_1 \subset C_2 \subset \ldots \subset C_\infty = \overline{\bigcup C_n}$ or $C_1 \supset C_2 \supset \ldots \supset C_\infty = \bigcap C_n$ in L_M and any $x \in L_M$,*

$$\|\pi(x|C_n) - \pi(x|C_\infty)\| \to 0 \qquad (n \to \infty).$$

Next, we consider predictors on Orlicz spaces. Recall that a subset Σ' of a set Σ is called a *σ-sublattice* of Σ if it is closed under countable unions and intersections and $\emptyset, G \in \Sigma'$. Let C be the set of all Σ'-measurable functions in a given space X of measurable functions on Σ and suppose the operator $\pi(\cdot|C)$ is well defined on X. Then $\pi(\cdot|C)$ is called a *predictor* given by Σ'. The predictor $\pi(\cdot|C)$ on L_M covers and unifies important operators in probability theory. For instance, if $M = |u|^2/2$ or $|u|^p/p$ $(1 < p < \infty)$ and Σ' is a σ-field, σ-lattice or σ-algebra, then $\pi(\cdot|C)$ covers the classical conditional expectation, Ando–Amemiya's p-predictor or Brunk's conditional p-means respectively.

LEMMA 4.14. *Let Σ'' be a σ-lattice generated by a lattice Σ'. Then for any $A \in \Sigma''$ and $\varepsilon > 0$, there exists $B \in \Sigma'$ such that $\mu(A \triangle B) < \varepsilon$, where $A \triangle B = (A \setminus B) \cup (B \setminus A)$.*

Proof. An easy exercise. ∎

LEMMA 4.15. *Suppose $M \in \Delta_2$ and that Σ'' is a σ-lattice generated by a lattice Σ' in Σ. Then for any Σ''-measurable function $u \in L_M$ and any $\varepsilon > 0$, there exists a Σ''-measurable simple function f such that $\|u - f\| < \varepsilon$.*

Proof. Since $M \in \Delta_2$, there exists a Σ''-measurable simple function g such that $\|u - g\| \le \varepsilon/2$. Say $g = \sum_{i=1}^m \alpha_i \chi_{E_i}$ and $\max\{|\alpha_i| : i \le m\} = K$. By Lemma 4.14, there exist $F_i \in \Sigma'$ such that

$$\mu(E_i \triangle F_i) \le [mM(4k/\varepsilon)]^{-1} \qquad (i \le m).$$

Define $f = \sum_{i=1}^m \alpha_i \chi_{F_i}$. Then f is a Σ'-measurable simple function and

$$\varrho_M\left(\frac{f-g}{\varepsilon/2}\right) \le \sum_{i=1}^m M(4K/\varepsilon)\mu(E_i \Delta F_i) \le 1.$$

This means $\|f - g\| \le \varepsilon/2$, and so $\|u - f\| \le \|u - g\| + \|g - f\| < \varepsilon/2 + \varepsilon/2 = \varepsilon$. ∎

LEMMA 4.16. *Let $M \in \Delta_2$ and $\{\Sigma_n\}$ be a monotone σ-sublattice in σ. Denote by C_n the set of all Σ_n-measurable functions in L_M $(n \in \mathbb{N})$. Then*

$$\Sigma_n \downarrow \Sigma_\infty = \bigcap \Sigma_n \Rightarrow C_n \downarrow C_\infty = \bigcap C_n.$$
$$\Sigma_n \uparrow \Sigma_\infty = \bigcup \Sigma_n \Rightarrow C_n \uparrow C_\infty = \overline{\bigcup C_n}.$$

Proof. The proof for the case $\Sigma_n \downarrow \Sigma_\infty$ is very simple. We only consider the case $\Sigma_n \uparrow \Sigma_\infty$. Since each C_n is contained in C_∞ and C_∞ is closed, we see $\overline{\bigcup C_n} \subset \Sigma_\infty$. On the other hand, for any $u \in \Sigma_\infty$ and any $\varepsilon > 0$, by Lemma 4.15, there exists a $\bigcup \Sigma_n$-measurable simple function f such that $\|u - f\| < \varepsilon$. Since f is simple and $\Sigma_n \uparrow \Sigma_\infty$, $f \in C_m$ for some $m \in \mathbb{N}$. Consequently, $u \in \overline{\bigcup C_n}$. ∎

THEOREM 4.17. *If $M \in \Delta_2 \cap \nabla_2$ and M is strictly convex, then $\Sigma_n \downarrow \Sigma_\infty$ or $\Sigma_n \uparrow \Sigma_\infty$ implies*

$$\|\pi(x|C_n) - \pi(x|C_\infty)\| \to 0 \qquad (n \to \infty)$$

for each $x \in L_M$, where C_n is the set of all Σ_n-measurable functions $(n = 1, 2, \ldots, \infty)$.

Proof. By the assumption, L_M is reflexive and rotund, and the conclusion follows from Lemma 4.16 and Corollary 4.13. ∎

Now, we investigate the existence of $\pi(\cdot|C)$ generated by a σ-sublattice Σ' of Σ.

THEOREM 4.18. *Let $M \in \Delta_2$ and C be the set of all Σ'-measurable functions in L_M for a given σ-sublattice Σ' of Σ. Then for any $x \in L_M$, $\pi(x|C) \neq \emptyset$.*

Proof. If $x \in C$, then $\pi(x|C) = \{x\} \neq \emptyset$. Now we assume $x \in L_M \setminus C$. Without loss of generality, we assume $d(x, C) = 1$ (if $d(x, C) = \alpha \neq 1$, then we consider x/α instead of x since C is clearly a closed convex cone). By Theorem 1.39, there exist $h_n \in C$ such that

$$1 \le \varrho_M(x - h_n) \le 1 + 2^{-n} \qquad (n \in \mathbb{N}). \tag{4.4}$$

Let $g(t) = \liminf_n h_n(t)$. We shall prove that $g \in \pi(x|C)$. Put, for each $k, n \in \mathbb{N}$ with $k \le n$,

$$g_{k,n}(t) = \min\{h_j(t) : k \le j \le n\}, \qquad g_k(t) = \inf\{h_j(t) : j \ge k\}$$

and

$$G_{k,n} = \{t \in G : x(t) \le g_{k,n}(t)\}, \qquad G_k = \{t \in G : x(t) \le g_k(t)\}.$$

Then

$$g_{k,n} \downarrow_n g_k \uparrow_k g, \qquad G_{k,n} \downarrow_n G_k \uparrow_k G_0 = \{t \in G : x(t) \le g(t)\}.$$

Moreover, observing that $g_{k,n+1} = g_{k,n} \wedge h_{n+1}$, we have

$$\begin{aligned} M(x(t) - g_{k,n+1}(t)) + M(x(t) - (g_{k,n} \vee h_{n+1})(t)) \\ = M(x(t) - g_{k,n}(t)) + M(x(t) - h_{n+1}(t)). \end{aligned} \tag{4.5}$$

As $g_{k,n} \vee h_{n+1} \in C$, relation (4.4) implies

$$\varrho_M(x - g_{k,n} \vee h_{n+1}) \ge 1 \ge \varrho_M(x - h_{n+1}) - 2^{-n-1}.$$

Hence, by integrating (4.5), we get

$$\varrho_M(x - g_{k,n+1}) \le \varrho_M(x - g_{k,n}) + 2^{-n-1}.$$

Applying this inequality repeatedly for $n \ge k$ and observing that $g_{k,k} = h_k$, we deduce that

$$\varrho_M(x - g_{k,n+1}) \le \varrho_M(x - h_k) + 2^{-k} \qquad (n \ge k). \tag{4.6}$$

Next we show

$$\lim_n \varrho_M(x - g_{k,n}) = \varrho_M(x - g_k), \qquad \lim_k \varrho_M(x - g_k) = \varrho_M(x - g).$$

Since the two equalities can be proved analogously, we only verify the first one. First, according to the Levi Lemma and

$$0 \le g_{k,n}(t) - x(t) \downarrow_n g_k(t) - x(t) \qquad (t \in G_k),$$

we find

$$\lim_n \varrho_M((x - g_{k,n})|_{G_k}) = \varrho_M((x - g_k)|_{G_k}). \tag{4.7}$$

Now, since for any $n \ge m \ge k$,

$$0 \le x(t) - g_{k,n}(t) \uparrow_n x(t) - g_k(t) \qquad (t \in G \setminus G_{k,m}),$$

by (4.6) and the Levi Lemma once more, we get

$$\lim_n \varrho_M((x-g_{k,n})|_{G\setminus G_{k,n}}) = \varrho_M((x-g_k)|_{G\setminus G_{k,m}}).$$

Recalling that $G_{k,m} \downarrow_m G_k$ and $\mu G < \infty$, we obtain

$$\lim_m \varrho_M((x-g_k)|_{G\setminus G_{k,m}}) = \varrho_M((x-g_k)|_{G\setminus G_k}).$$

Combining this with (4.7), we obtain

$$\lim_n \varrho_M(x-g_{k,n}) = \varrho_M(x-g_k).$$

Hence, by (4.6) and (4.4), $g_k, g \in L_M$ and $\varrho_M(x-g) \le 1$. But it is easy to check that C is closed under countable unions and intersections in L_M, so $g \in C$ and thus, $g \in \pi(x|C)$. ∎

By Theorems 4.18 and 2.2, we have

COROLLARY 4.19. *Let $M \in \Delta_2$ and M be strictly convex. Then $\pi(\cdot|C)$ is a single-valued mapping from L_M to C, where $\pi(\cdot|C)$ is generated by a σ-sublattice in Σ.*

In the following, we will search the conditions for a given operator to coincide with some predictor on L_M. We first present some basic properties for a predictor.

PROPOSITION 4.20. *Let (G, Σ, μ) be a measure space, X a Σ-measurable Banach function space and suppose the set of all Σ-simple functions is dense in X. Then a predictor T has the following properties.*

(i) $T(r) = r$ $(r \in \mathbb{R})$ *and* $T^2x = Tx$ $(x \in X)$,
(ii) *if* $Tx = x, Ty = y$ *and* $\alpha, \beta \in \mathbb{R}^+$, *then* $T(\alpha x + \beta y) = \alpha x + \beta y$,
(iii) *if* $Tx = x$ *and* $r \in \mathbb{R}$, *then*

$$T(x \vee r) = x \vee r, \qquad T(x \wedge r) = x \wedge r,$$

(iv) $Tx_n = x_n$ $(n \in \mathbb{N})$ *and* $\|x_n - x\| \to 0$ $(n \to \infty)$ *imply* $Tx = x$,
(v) *if* $r \in \mathbb{R}$, $\alpha \in \mathbb{R}^+$, $0 \le \theta \le 1$ *and* $T(1|_A) = 1|_A$, *then for any* $x \in X$,

$$\|x - Tx\| \le \|x - Tx + \theta Tx - \alpha|_A + r\|,$$

where $\mathbb{R}$, $\mathbb{R}^+$ are the sets of all real and all positive numbers respectively, and for a constant α, $\alpha|_A$ stands for $\alpha\chi_A$.

Proof. Let $T = \pi(\cdot|C)$ be generated by a given σ-sublattice Σ' in Σ. Then clearly, $\emptyset, G \in \Sigma', C$ is a closed convex cone and $x \in C$ iff $Tx = x$. Therefore, (i), (ii) and (iv) follow directly.

(iii) Noting that $x \in C$ means that x is Σ'-measurable, it follows from

$$G(x \vee r > a) = G \text{ or } G(x > a) \qquad (r, a \in \mathbb{R})$$

(according as $a < r$ or $a > r$) that $x \vee r$ is a Σ'-measurable function, i.e., $x \vee r \in C$. Similarly, we also have $x \wedge r \in C$.

(v) Since C is a convex cone, $Tx, 1|_A, -r \in C$ implies $(1-\theta)Tx + \alpha|_A - r \in C$. Thus, (v) follows immediately from the definition of predictors. ∎

THEOREM 4.21. *Let $X = L_M, L_M^o, l_M$ or $l_M^o, M \in \Delta_2$ and M be strictly convex and smooth. Then an operator $T : X \to X$ is a predictor iff it satisfies the conditions* (i)–(v) *of Proposition* 4.20.

Proof. We only prove the theorem for $X = L_M$. Other cases can be proved analogously. It suffices to check the sufficiency since the necessity is a special case of Proposition 4.20.

Set

$$C = \{x \in L_M : Tx = x\}, \qquad \Sigma' = \{A \in \Sigma : 1|_A \in C\}.$$

We shall show that $T = \pi(\cdot|C)$ and $\pi(\cdot|C)$ is generated by the σ-sublattice Σ' in the following steps.

Step I. We verify that Σ' is a σ-sublattice of Σ, i.e., (a) $\emptyset, G \in \Sigma'$, (b) $A, B \in \Sigma' \Rightarrow A \cup B, A \cap B \in \Sigma'$ and (c) $A_n \in \Sigma'$, $A_n \uparrow A$ or $A_n \downarrow A \Rightarrow A \in \Sigma'$.

(a) is trivial by property (i). Let $A, B \in \Sigma'$, i.e., $1|_A, 1|_B \in C$. It follows from (i)–(iii) and

$$1|_{A\cup B} = (1|_A + 1|_B) \wedge 1, \qquad 1|_{A\cap B} = (1|_A + 1|_B - 1) \vee 0$$

that $A \cup B, A \cap B \in \Sigma'$. Now, let $A_n \in \Sigma'$ and $A_n \uparrow A$. Then (iv) and $\|1|_A - 1|_{A_n}\| \to 0$ imply $1|_A \in C$, i.e., $A \in \Sigma'$. Similarly, if $A_n \in \Sigma'$ and $A_n \downarrow A$, then $A \in \Sigma'$.

Step II. We prove that $\pi(\cdot|C)$ is generated by Σ', i.e., C is the set of all Σ'-measurable functions in L_M. First we let $x \in C$ and $a \in \mathbb{R}$. Set

$$y_n = [(3/2)^n(x - a) \vee 0] \wedge 1.$$

Then $y_n \in C$ ($n \in \mathbb{N}$) by (i)–(iii). Moreover, from

$$\begin{aligned} &x(t) \le a \Rightarrow y_n(t) = 0 = 1|_{G(x>a)}(t),\\ &x(t) > a \Rightarrow y_n(t) = (3/2)^n(x(t) - a) \wedge 1 \to 1 = 1|_{G(x>a)}(t), \end{aligned}$$

we deduce that $\|1|_{G(x>a)} - y_n\| \to 0$ as $n \to \infty$. Hence, $1|_{G(x>a)} \in C$, i.e., $G(x > a) \in \Sigma'$. This shows that x is Σ'-measurable. Now, we suppose that $x \in L_M$ is Σ'-measurable, i.e., $1|_{G(x>a)} \in C$ for every $a \in \mathbb{R}$. To prove $x \in C$, we first assume $x(t) \ge 0$ on G. For each $n \in \mathbb{N}$, by property (ii), we have

$$\sum_{k=0}^{2^n n} \frac{k}{2^n}\bigg|_{G((k+1)/2^n \ge x > k/2^n)} = \frac{1}{2^n}\sum_{k=0}^{2^n n} 1|_{G(x>k/2^n)} \in C.$$

Since $M \in \Delta_2$ implies

$$\left\| x - \sum_{k=0}^{2^n n} \frac{k}{2^n}\bigg|_{G((k+1)/2^n \ge x > k/2^n)} \right\| \to 0 \qquad \text{as } n \to \infty,$$

(iv) yields $x \in C$.

For general Σ'-measurable $x \in L_M$ and any $m \in \mathbb{N}$, since $x|_{G(x>-m)} + m \ge 0$ is also Σ'-measurable, by the above discussion, $x|_{G(x>-m)} + m \in C$. Hence, $x|_{G(x>-m)} \in C$. But $x|_{G(x>-m)} \downarrow_m x$, and by property (iv) and since $M \in \Delta_2$, we have $x \in C$.

Step III. We finish the proof by showing that $Tx = \pi(x|C)$ for all $x \in L_M$. In view of Theorem 4.3, it suffices to show

$$\int_G u(t)p\left(\frac{|x(t) - (Tx)(t)|}{\|x - Tx\|}\right)\operatorname{sign}[x(t) - (Tx)(t)]\,dt \ge 0 \tag{4.8}$$

and

$$\int_G (Tx)(t)p\Big(\frac{|x(t)-(Tx)(t)|}{\|x-Tx\|}\Big)\operatorname{sign}[x(t)-(Tx)(t)]\,dt \ge 0 \tag{4.9}$$

for all $u \in C$ and $x \in L_M \setminus C$. First, we claim that

$$\int_A p\Big(\frac{|x(t)-(Tx)(t)|}{\|x-Tx\|}\Big)\operatorname{sign}[x(t)-(Tx)(t)]\,dt = 0 \tag{4.10}$$

holds for all $x \in L_M \setminus C$ and all $A \in \Sigma'$. Indeed, by putting $r, \theta = 0$ in (v), we have

$$\|x-Tx\| \le \|x-Tx-\alpha|_A\| \qquad (n \in \mathbb{N}).$$

This means that the function $\alpha \to \|x-Tx-\alpha|_A\|$ attains its minimum at 0. Since by Theorem 2.50 the norm $\|\cdot\|$ is Gateaux differentiable, we deduce that

$$0 = \lim_{\alpha\to 0}\frac{1}{\alpha}[\|x-Tx-\alpha|_A\| - \|x-Tx\|] = \langle f(x-Tx), -1|_A\rangle,$$

where $f(x-Tx)$ is the supporting functional of $x-Tx$. Hence, (4.10) follows from Theorem 2.49.

To prove (4.8), we first observe, by (4.10), that (4.8) holds for all $u \in C$ of the form

$$u = \bigvee\{\beta_i|_{A_i} : i = 1,\ldots,n\}, \qquad \beta_i \ge 0,\ A_i \in \Sigma'. \tag{4.11}$$

If $u \ge 0$, then by the discussion of Step II, there exists $\{u_n\}$ having the form of (4.11) such that $u_n \uparrow u$. Hence, by the Levi Lemma and the above discussion, (4.8) is true for such u. Finally, for arbitrary $u \in C$ and $m \in \mathbb{N}$, since $0 \le u|_{G(u>-m)} + m \in C$, (4.8) holds if we replace u by $u|_{G(u>-m)} + m$. But by property (i), (4.10) holds for $A = G$, and we find that (4.8) is true if we replace u by $u|_{G(u>-m)}$. Thus, by the Levi Lemma and $u|_{G(u>-m)} \downarrow u$, we get (4.8) for all $u \in C$.

To prove (4.9), we put $r, \alpha = 0$ in (v). Then

$$\|x-Tx\| \le \|x-Tx+\theta Tx\| \qquad (0<\theta<1).$$

Therefore,

$$0 \le \lim_{\theta\to 0}\frac{1}{\theta}[\|x-Tx+\theta Tx\| - \|x-Tx\|] = \langle f(x-Tx), Tx\rangle.$$

Combining this with Theorem 2.49 we obtain (4.9). ∎

4.3. Some optimal control problems. We first investigate the minimal norm control problem. Consider the following single input distributed parameter system:

$$x(t) = V(t)x_0 + \int_0^t U(t,\gamma)yu(t)\,d\gamma, \tag{4.12}$$

where the control space is L^o_M (for $G = [0,T]$), i.e., $u \in L^o_M$; the state space is a Banach space X, i.e., $x_0 \in X$, $x(t) \in X$, $0 \le t \le T$, $y \in X$; and $V(t)$ $(0 \le t \le T)$, $U(t,\gamma)$ $(0 \le \gamma < t \le T)$ are families of bounded operators from X to X. Set

$$Q_T = \Big\{x \in X : x = x(T) = V(T)x_0 + \int_0^T U(T,\gamma)yu(\gamma)\,d\gamma \text{ for some } u \in L^o_M\Big\}.$$

For convenience, we assume $x_0 = 0$ in system (4.12). For $x^0(\neq 0) \in Q_T$, let

$$C(x^0) = \Big\{u \in L_M^o : x^0 = \int_0^T U(T,\gamma)yu(t)\,d\gamma\Big\}.$$

Then, to determine $u^0 \in C(x^0)$ such that

$$\|u^0\|^o = \inf\{\|u\|^o : u \in C(x^0)\}$$

is called the *minimal norm control problem*. In particular, if $M(t) = |t|^2/2$, then the above problem is the well known minimal energy control problem.

In the following, we always assume that

(1) $M \in \Delta_2 \cap \nabla_2$ and M is strictly convex and smooth,
(2) $\|U(T,\cdot)y\| \in L_N$,
(3) X is reflexive and has an unconditional basis $\{e_n\}$,
(4) $x^0 = \sum \alpha_n e_n$ and $U(T,\gamma)y = \sum g_n(\gamma)e_n$.

Since $\{e_n\}$ is an unconditional basis of X, for each $n \in \mathbb{N}$,

$$|g_n(\gamma)| = \|g_n(\gamma)e_n\|/\|e_n\| \le \Big\|\sum g_k(\gamma)e_k\Big\|/\|e_n\| = \|U(T,\gamma)y\|/\|e_n\|.$$

Therefore, by (2), $g_n \in L_N$ $(n \in \mathbb{N})$.

LEMMA 4.22. *Suppose that* $\lambda^0 = \{\lambda_n^0\}$ *satisfies* $\sum \lambda_n^0 = 1$ *and*

$$\Big\|\sum \lambda_n^0 g_n\Big\|_N = \inf\Big\{\Big\|\sum \lambda_n g_n\Big\|_N : \sum \lambda_n\alpha_n = 1\Big\}.$$

Then $\|u^0\|^o = \|\sum \lambda_n^0 g_n\|_N^{-1}$ *provided that* $u^0 \in C(x^0)$ *is the minimum norm control, i.e.,* $\|u^0\|^o = \inf\{\|u\|^o : u \in C(x^0)\}$.

Proof. Since $x^0 = \int_0^T U(T,\gamma)yu^0(\gamma)\,d\gamma$,

$$\sum_{n=1}^\infty \alpha_n e_n = \int_0^T \Big[\sum_{n=1}^\infty g_n(\gamma)e_n\Big]u^0(\gamma)\,d\gamma = \sum_{n=1}^\infty \Big[\int_0^T g_n(\gamma)u^0(\gamma)\,d\gamma\Big]e_n.$$

Hence, $\alpha_n = \int_0^T g_n(\gamma)u^0(\gamma)\,d\gamma$ $(n \in \mathbb{N})$. Let $\lambda = \{\lambda_n\}$ satisfy $\sum \lambda_n\alpha_n = 1$ and $\|\sum \lambda_n g_n\|_N < \infty$. Then

$$1 = \sum_{n=1}^\infty \lambda_n\alpha_n = \int_0^T \Big[\sum_{n=1}^\infty \lambda_n g_n(\gamma)\Big]u^0(\gamma)\,d\gamma \le \Big\|\sum_{n=1}^\infty \lambda_n g_n\Big\|_N \|u^0\|^o. \tag{4.13}$$

Thus,

$$\Big\|\sum_{n=1}^\infty \lambda_n^0 g_n\Big\|_N = \inf\Big\{\Big\|\sum_{n=1}^\infty \lambda_n g_n\Big\|_N : \sum_{n=1}^\infty \lambda_n\alpha_n = 1\Big\} \ge \|u^0\|^{o-1}. \tag{4.14}$$

Next we prove $\|\sum_{n=1}^\infty \lambda_n^0 g_n\|_N \le \|u^0\|^{o-1}$. Set

$$H = \Big\{g \in L_N : g(t) = \sum_{n=1}^\infty \lambda_n g_n(t) \text{ for some } \{\lambda_n\} \text{ with } \sum_{n=1}^\infty \lambda_n\alpha_n < \infty\Big\}.$$

Then H is a subspace of L_N. Define a functional F on H by

$$F(g) = \sum_{n=1}^\infty \lambda_n\alpha_n, \qquad g = \sum_{n=1}^\infty \lambda_n g_n \in H.$$

Then F is uniquely determined by g. In fact, if $g(\gamma)=\sum\lambda_n g_n(\gamma)=\sum\mu_n g_n(\gamma)$, then

$$\Big|\sum\alpha_n\lambda_n-\sum\alpha_n\mu_n\Big|=\Big|\int_0^T\Big[\sum(\lambda_n-\mu_n)g_n(\gamma)\Big]u^0(\gamma)\,d\gamma\Big|$$
$$\le\Big\|\sum(\lambda_n-\mu_n)g_n\Big\|_N\|u^0\|^o=0.$$

Moreover, it is clear that F is linear. Now, we calculate the norm of F:

$$\begin{aligned}\|F\|&:=\sup\{|F(g)|/\|g\|_N:0\ne g\in H\}\\&=\sup\Big\{\Big|\sum\lambda_n\alpha_n\Big|\Big/\Big\|\sum\lambda_n g_n\Big\|_N:\sum\lambda_n\alpha_n<\infty\Big\}\\&=\Big[\inf\Big\{\Big\|\sum\lambda_n g_n\Big\|_N:\sum\lambda_n\alpha_n=1\Big\}\Big]^{-1}=\Big\|\sum\lambda_n^0 g_n\Big\|_N^{-1}.\end{aligned}$$

By the Hahn–Banach Theorem, we may assume that $F\in L_N^*=L_M^o$. Thus, there exists $u'\in L_M^o$ with

$$F(g)=\langle u',g\rangle\quad(g\in L_N),\quad\|u'\|^o=\Big\|\sum\lambda_n^0 g_n\Big\|_N^{-1}.\tag{4.15}$$

In particular, $\alpha_n=F(g_n)=\langle u',g_n\rangle$ $(n\in\mathbb{N})$. So,

$$x^0=\sum_{n=1}^\infty\alpha_n e_n=\sum_{n=1}^\infty\langle u',g_n\rangle e_n=\int_0^T\Big[\sum_{n=1}^\infty g_n(\gamma)e_n\Big]u'(\gamma)\,d\gamma=\int_0^T U(T,\gamma)yu'(\gamma)\,d\gamma.$$

This shows $u'\in C(x^0)$. But u^0 is the minimal norm control, so $\|u^0\|^o\le\|u'\|^o$. Hence, by (4.14) and (4.15), $\|u^0\|^o=\|u'\|^o$. On the other hand, since it is clear that $C(x^0)$ is a closed convex set and $0\in C(x^0)$, by the rotundity of L_M^o, the minimal norm control is unique, and thus, $u'=u^0$. Consequently, (4.15) completes the proof. ∎

THEOREM 4.23. *The minimal norm control u^0 has the form*

$$u^0=\frac{1}{k}q\Big(\frac{|\sum\lambda_n^0 g_n|}{\|\sum\lambda_n^0 g_n\|_N}\Big)\operatorname{sign}\sum\lambda_n^0 g_n,$$

where $\{\lambda_n^0\}$ is as in Lemma 4.22 and

$$k=\Big\|\sum\lambda_n^0 g_n\Big\|_N\Big\|q\Big(\frac{|\sum\lambda_n^0 g_n|}{\|\sum\lambda_n^0 g_n\|_N}\Big)\Big\|^0.$$

Proof. By (4.13) and Lemma 4.22,

$$\|u^0\|^o=\Big\|\sum\lambda_n^0 g_n\Big\|_N^{-1}=\int_0^T\Big[\sum\lambda_n^0 g_n(\gamma)\Big/\Big\|\sum\lambda_n^0 g_n\Big\|_N\Big]u^0(\gamma)\,d\gamma.$$

Therefore, the assertion follows from Theorem 2.49. ∎

COROLLARY 4.24. *Let $M(t)=|u|^\alpha/\alpha$ $(1<\alpha<\infty)$. Then the minimal norm control u^0 is*

$$u^0=\Big[\Big|\sum\lambda_n^0 g_n\Big|^{\beta-1}\Big/\Big\|\sum\lambda_n^0 g_n\Big\|_{L^\beta}^\beta\Big]\operatorname{sign}\sum\lambda_n^0 g_n,$$

where $1/\alpha+1/\beta=1$ and $\{\lambda_n^0\}$ satisfies $\sum\lambda_n^0\alpha_n=1$ and

$$\Big\|\sum\lambda_n^0 g_n\Big\|_{L^\beta}=\inf\Big\{\Big\|\sum\lambda_n g_n\Big\|_{L^\beta}:\sum\lambda_n\alpha_n=1\Big\}.$$

Proof. Since $N(s) = |s|^\beta/\beta$ and $q(|s|) = |s|^{\beta-1}$, by Theorem 4.23 and

$$1 = \sum \lambda_n^0 \alpha_n = \int_0^T u^0(\gamma) \sum \lambda_n^0 g_n(\gamma)\, d\gamma,$$

we find that

$$k\Big\| \sum \lambda_n^0 g_n \Big\|_N^{\beta-1} = \Big\| \sum \lambda_n^0 g_n \Big\|_N^{\beta}.$$

By putting this into the expression of u^0 in Theorem 4.23, the assertion follows. ∎

Corollary 4.25. *Let $X = H$ be a Hilbert space, $M(t) = |t|^2/2$, $U(T,t) = e^{-(T-t)A}y$, $y \in H$, where $\{e^{-tA} : t \ge 0\}$ is the C_0 operator semigroup generated by a closed densely defined operator $-A$ on H. Moreover, let $\{\gamma_n\}$ be the set of eigenvalues of A, let the corresponding eigenvectors $\{\varphi_n\}$ form a complete orthonormal system in H, and let $\{\psi_n\}$ be its dual sequence. Then the minimal energy control $u^0 \in C(x^0)$ is given by*

$$u^0 = \sum_{n=1}^{\infty} \lambda_n^0 \langle y, \psi_n\rangle e^{-(T-t)\gamma_n} \int_0^T \Big[\sum_{n=1}^{\infty} \lambda_n^0 \langle y, \psi_n\rangle e^{-(T-t)\gamma_n} \Big]^2 dt,$$

where $\{\lambda_n^0\}$ satisfies $\sum \lambda_n^0 \langle x^0, \varphi_n\rangle = 1$ and

$$\int_0^T \Big[\sum_{n=1}^{\infty} \lambda_n^0 \langle y, \psi_n\rangle e^{-(T-t)\gamma_n} \Big]^2 dt$$
$$= \inf \Big\{ \int_0^T \Big[\sum_{n=1}^{\infty} \lambda_n \langle x^0, \psi_n\rangle e^{-(T-t)\gamma_n} \Big]^2 dt : \sum_{n=1}^{\infty} \lambda_n \langle y, \psi_n\rangle = 1 \Big\}.$$

Proof. Since $x^0, y \in H$,

$$x^0 = \sum_{n=1}^{\infty} \langle x^0, \psi_n\rangle \varphi_n, \quad y = \sum_{n=1}^{\infty} \langle y, \psi_n\rangle \varphi_n \quad (n \in \mathbb{N}).$$

So, by the spectral theorem,

$$e^{-(T-t)A} y = \sum_{n=1}^{\infty} \langle y, \psi_n\rangle e^{-(T-t)\gamma_n} \varphi_n \qquad (n \in \mathbb{N}).$$

Hence, the conclusion follows from Corollary 4.24. ∎

Before considering another optimal control problem, we investigate the union and the intersection of Orlicz spaces. First we observe that

$$L^\infty \subsetneq L_{M_1} \subset \bigcap\{L^p : 1 < p < \infty\} \subset \bigcup\{L^p : 1 < p < \infty\} \subset L_{M_2} \subsetneq L^1,$$
$$l^1 \subsetneq l_{M_2} \subset \bigcap\{l^p : 1 < p < \infty\} \subset \bigcup\{l^p : 1 < p < \infty\} \subset l_{M_1} \subsetneq c_0,$$

where

$$M_1(t) = e^{|t|} - |t| - 1, \qquad M_2(t) = (1 + |t|)\ln(1 + |t|) - |t|.$$

But for Orlicz spaces, we have

Proposition 4.26. *Let O be the set of all Orlicz functions. Then*

(i) $L^\infty = \bigcap\{L_M : M \in O\} = \bigcap\{L_M : M \in \nabla_2\}$,
(ii) $L^1 = \bigcup\{L_M : M \in O\} = \bigcup\{L_M : M \in \Delta_2\}$,

(iii) $c_0 = \bigcup\{l_M : M \in O\} = \bigcup\{l_M : M \in \nabla_2\}$,
(iv) $l^1 = \bigcap\{l_M : M \in O\} = \bigcap\{l_M : M \in \Delta_2\}$.

Proof. (i) Clearly, $L^\infty \subset \bigcap\{L_M : M \in O\} \subset \bigcap\{L_M : M \in \nabla_2\}$. We shall prove the inverse inclusion by showing that for any $x \notin L^\infty$, $x \notin L_M$ for some $M \in \nabla_2$. Set

$$G_n = \{t \in G : 2^n \le |x(t)| < 2^{n+1}\} \qquad (n \in \mathbb{N}).$$

Then $\mu G_n > 0$ for infinitely many $n \in \mathbb{N}$. Pick $\alpha_k \uparrow \infty$ such that $\alpha_1 \ge 2,\ \alpha_{k+1} \ge 5\alpha_k$ and $\alpha_k \mu G_n \ge 1$ for all $k > n/2 - 1$ and all $n > 2$ with $\mu G_n > 0$. Then we define

$$p(t) = \begin{cases} t, & 0 \le t < 2, \\ \alpha_n, & 2^n \le t < 2^{n+1},\ n \in \mathbb{N}, \end{cases}$$

and $M(u) = \int_0^{|u|} p(t)\,dt$. Then it is clear that $M \in O$ by Proposition 1.6. We first verify $M \in \nabla_2$. Indeed, for any $t > 2$, say $2^n \le t < 2^{n+1}$, we have, by (1.5),

$$M(8t) \ge 4tp(4t) = 4tp(2^{n+2}) = 4t\alpha_{n+2} \ge 12t\alpha_{n+1} = 12tp(2^{n+1}) \ge 12tp(t) \ge 12M(t).$$

It follows from Theorem 1.13 that $M \in \nabla_2$.

Next we show $x \notin L_M$. In fact, for any $m \in \mathbb{N}$ and any $n > 2m$ with $\mu G_n > 0$, let $k \le n/2 < k+1$. Then by (1.5) and the choice of $\{G_n\}$ and $\{\alpha_k\}$,

$$\begin{aligned}\int_{G_n} M(x(t)/m)\,dt &\ge M(2^n/m)\mu G_n \ge \frac{2^n}{2m} p\left(\frac{2^n}{2m}\right)\mu G_n \ge 2^{n-m} p(2^{n-m})\mu G_n \\ &\ge p(\alpha_k)\mu G_n \ge 1.\end{aligned}$$

Therefore,

$$\varrho_M(x/m) = \sum_{n=1}^{\infty} \int_{G_n} M(x(t)/m)\,dt \ge \sum_{\mu G_n > 0} 1 = \infty.$$

This shows that $x \notin L_M$ since $m \in \mathbb{N}$ is arbitrary.

(ii) For any $M \in O$ and any $x \in L_M$, since $M(u)/u \to \infty$ as $n \to \infty$, we have $x \in L^1$, whence,

$$L^1 \supset \bigcup\{L_M : M \in O\} \supset \bigcup\{L_M : M \in \Delta_2\}.$$

To prove the inverse inclusion, we shall find, for arbitrarily given $x \in L^1$, some $M \in \Delta_2$ such that $x \in L_M$. Let

$$G_n = \{t \in G : n - 1 \le |x(t)| < n\} \qquad (n \in \mathbb{N}).$$

Then since $x \in L^1$, we have

$$\sum_{n=1}^{\infty} n\mu G_n \le \int_G |x(t)|\,dt + \mu G < \infty.$$

This allows us to pick a subsequence $\{m_k\}$ of $\mathbb{N}$ such that $m_k \ge k,\ m_{k+1} \ge 2m_k$ and

$$\sum_{n=m_k+1}^{m_{k+1}} n\mu G_n < \frac{1}{2^k} \qquad (k \in \mathbb{N}).$$

Define

$$p(t) = \begin{cases} t, & 0 \le t < 1, \\ 1, & 1 \le t < m_1, \\ k, & m_k \le t < m_k + 1,\ k \in \mathbb{N}, \end{cases}$$

and $M(u) = \int_0^{|u|} p(t)\,dt$. Then obviously, $M \in O$. Next we prove $M \in \Delta_2$. Indeed, for any $t \ge 2m_1$, say $m_k \le t < m_{k+1}$, we have $2m_k \le 2t < m_{k+1} < m_{k+2}$. Hence,

$$p(2t) \le p(m_{k+1}) = k + 1 \le 2k = 2p(t).$$

It follows from (1.5) that

$$M(2t) \le 2tp(2t) \le 16\frac{t}{2}p\left(\frac{t}{2}\right) \le 16M(t),$$

which shows $M \in \Delta_2$.

Now, we show $x \in L_M$. This follows from

$$\begin{aligned} \varrho_M(x) &= \sum_{n=1}^{\infty} \int_{G_n} M(x(t))\,dt \le \sum_{n=1}^{\infty} M(n)\mu G_n \\ &\le \sum_{n=1}^{\infty} np(n)\mu G_n \le \sum_{n=1}^{m_1} n\mu G_n + \sum_{k=1}^{\infty} \frac{k}{2^k} < \infty. \end{aligned}$$

N o t e. Since $m_k > k$, we have $p(t) \le t$, and thus, $L^2 \subset L_M$.

(iii) It is trivial that for any $M \in O$ and any $x = (x(i)) \in l_M$, we have $x(i) \to 0$, i.e., $x \in c_0$. It remains to show that for each $x = (x(i)) \in c_0,\ x \in l_M$ for some $M \in \nabla_2$. Without loss of generality, we assume $0 < x(i) \downarrow 0$ and $x(1) \le 1$. Set

$$I_k = \{i \in \mathbb{N} : (k+1)^{-1} < x(i) \le k^{-1}\}$$

and pick $\alpha^k \in (0,1)$ such that $\alpha_k \downarrow 0$, $\alpha_k > 3\alpha_{k+1}$ and $2^k\alpha_k\mu I_k \le k$. Define

$$p(t) = \begin{cases} 0, & t = 0, \\ t, & t > 1, \\ \alpha_k, & (k+1)^{-1} < t \le k^{-1},\ k \in \mathbb{N}, \end{cases}$$

and $M(u) = \int_0^{|u|} p(t)\,dt$. Then $M \in O$ and from

$$\sum_{i \in I_k} M(x(i)) \le M(1/k)\mu I_k \le \frac{1}{k}p\left(\frac{1}{k}\right)\mu I_k = \frac{1}{k}\alpha_k\mu I_k \le 2^{-k},$$

we have

$$\varrho_M(x) = \sum_{k=1}^{\infty}\sum_{i \in I_k} M(x(i)) \le \sum_{k=1}^{\infty} 2^{-k} = 1 < \infty.$$

Hence, $x \in l_M$. To check $M \in \nabla_2$, we estimate, for any $t \in (0,1)$ (say $(k+1)^{-1} < t \le k^{-1}$),

$$p(t) = \alpha_k \ge 3\alpha_{k+1} = 3p\left(\frac{1}{k+1}\right) \ge 3p\left(\frac{1}{2k}\right) \ge 3p\left(\frac{t}{2}\right).$$

Then by (1.5), we have, for any $t \in (0, 1/2)$,

$$M(4t) \ge 2tp(2t) \ge 6tp(t) \ge 6M(t).$$

It follows from Theorem 1.13 that $M \in \nabla_2$.

(iv) For every $x \in l^1$ and $M \in O$, since $M(u)/u \to 0$ $(u \to 0)$, we have $x \in l_M$, i.e.,

$$l^1 \subset \bigcap\{l_M : M \in O\} \subset \bigcap\{l_M : M \in \Delta_2\}.$$

Now, we prove that $x = (x(i)) \notin l^1$ implies $x \notin L_M$ for some $M \in \Delta_2$. According to (iii), we may assume $x \in c_0$. Hence, we can assume $0 < x(i) \downarrow 0$ and $x(1) \le 1$. Since $x \notin l^1$, we can choose $\alpha_k > 0$ such that $\alpha_k > k\alpha_{k+1}$, $\alpha_1 = 1$ and that $\sum_{i\in I_k} x(i) \ge k$, where $I_k = \{i \in \mathbb{N} : \alpha_{k+1} < x(i) \le \alpha_k\}$ $(k \in \mathbb{N})$. Define

$$p(t) = \begin{cases} 0, & t = 0, \\ 1/k, & \alpha_{k+1} < t \le \alpha_k,\ k \in \mathbb{N}, \\ t, & t > 1, \end{cases}$$

and $M(u) = \int_0^{|u|} p(t)\,dt$. Then $M \in O$. Moreover, for any small $t > 0$, say $\alpha_{k+1} < t \le \alpha_k$, we have $2\alpha_{k+1} < 2t \le 2\alpha_k \le \alpha_{k-1}$ and thus,

$$p(2t) \le p(\alpha_{k-1}) = \frac{k+1}{k-1} \cdot \frac{1}{k+1} = \frac{k+1}{k-1} p(\alpha_{k+1}) \le 3p(t).$$

Using this inequality repeatedly and applying (1.5), we obtain

$$M(2t) \le 2tp(2t) \le 36\frac{t}{2}p\left(\frac{t}{2}\right) \le 36M(t).$$

This proves $M \in \Delta_2$. But for any $\varepsilon > 0$ and $k > 2/\varepsilon$, since

$$\begin{aligned}\sum_{i\in I_k} M(\varepsilon x(i)) &\ge \sum_{i\in I_k} \frac{\varepsilon}{2} x(i) p\left(\frac{\varepsilon}{2} x(i)\right) \ge \frac{\varepsilon}{2} p\left(\frac{\varepsilon}{2}\alpha_{k+1}\right) \sum_{i\in I_k} x(i) \\ &\ge \frac{\varepsilon}{2} p\left(\frac{\varepsilon}{2} k\alpha_{k+2}\right) k \ge p(\alpha_{k+2}) = \frac{1}{k+2},\end{aligned}$$

we have

$$\varrho_M(\varepsilon x) \ge \sum_{k>2/\varepsilon} \sum_{i\in I_k} M(\varepsilon x(i)) \ge \sum_{k>2/\varepsilon} \frac{1}{k+2} = \infty.$$

Therefore, $x \notin l_M$, completing the proof. ■

To end this section, we consider the distributed parameter system

$$\text{(S)} \qquad \begin{cases} (\lambda - \Delta)y = f, & x \in \Omega, \\ \partial y/\partial n = g, & x \in \Gamma_1, \\ y = v, & x \in \Gamma_0, \end{cases}$$

where Δ is the Laplace operator, Ω is a bounded open domain in $\mathbb{R}^n$ with smooth boundary Γ and Ω is locally located on one side of Γ, $\Gamma = \Gamma_0 \cup \Gamma_1, \Gamma_0 \cap \Gamma_1 = \emptyset, \lambda > 0$ and $f \in L^2(\Omega), g \in L^2(\Gamma_1)$, v is a boundary condition to be determined.

Some problems in engineering can be stated as follows. For a given admissible set U_{ad} of v, does there exist a unique $v^* \in U_{\mathrm{ad}}$ such that the solution $y(v^*)$ is "closest" to a given element h?

If $h \in L^p$ $(1 < p < \infty)$, then we may take the metric $J(v) = \|y(v) - h\|_{L^p}$, but when $h \in L^1 \setminus L^r$ for any $r > 1$, then the above metric usually fails to guarantee the uniqueness of v^*. However, in this case, we can discuss the problem in Orlicz spaces since by Proposition 4.26 and the Note in its proof, we can find some $M \in \Delta_2$ such

that $h \in L_M$, $L^2 \subset L_M$ and we may assume that L_M is rotund and smooth thanks to Theorems 1.16, 2.2 and 2.50.

We first prove two lemmas.

LEMMA 4.27. *For $v \in L^2(\Gamma_0)$, let $y(v)$ be the generalized solution of problem* (S). *Then the operator A: $v \to y(v)$ is continuous from $L^2(\Gamma_0)$ to L_M and moreover, $A(v) = A'(0)v + A(0)$, where $A'(0)$ is the Fréchet derivative of A at* 0.

Proof. It is well known that (S) has a unique solution $y(v) \in H^{1/2} \subset H^0 = L^2 \subset L_M$, where $H^{1/2}$ and H^0 are Sobolev spaces. Now, let $v_n \in L^2(\Gamma_0)$ be such that $\|v_n - v\|_{L^2(\Gamma_0)} \to 0$ as $n \to \infty$. By the proof of Proposition 4.26, we may assume that $\|x\|_M \le \beta\|x\|_{L^2}$ for some $\beta > 0$ and $x \in L^2$. Hence, by the continuity of A in L^2, we have

$$\|y(v_n) - y(v)\|_M \le \beta\|y(v_n) - y(v)\|_{L_2} \to 0 \qquad (n \to \infty),$$

i.e., A is continuous from $L^2(\Gamma_0)$ to L_M.

Finally, we investigate the Fréchet differentiability of A at 0. For any $\psi \in C_0^\infty$, by the regularity of solutions, there exists $\varphi \in C^\infty \cap L^\infty$ satisfying

$$\begin{cases} (1-\Delta)\varphi = \psi, & x \in \Omega, \\ \partial\varphi/\partial n = 0, & x \in \Gamma_1, \\ \varphi = 0, & x \in \Gamma_0. \end{cases}$$

But by applying the Green Formula and (S), we have

$$\begin{aligned} \int_\Omega f\varphi\,dt &= \int_\Omega (\lambda - \Delta)y(v)\,dt \\ &= -\int_\Gamma \frac{\partial y(v)}{\partial n}\varphi\,dt + \int_\Gamma y(v)\frac{\partial\varphi}{\partial n}\,dt + \int_\Omega y(v)(\lambda-\Delta)\varphi\,dt \\ &= \int_{\Gamma_0} \frac{\partial y(v)}{\partial n}\varphi\,dt - \int_{\Gamma_1} g\varphi\,dt + \int_{\Gamma_0} v\frac{\partial\varphi}{\partial n}\,dt + \int_\Gamma y(v)\frac{\partial\varphi}{\partial n}\,dt + \int_\Omega y(v)(\lambda-\Delta)\varphi\,dt. \end{aligned}$$

Hence,

$$\int_\Omega y(v)\psi\,dt = \int_\Omega y(v)(\lambda-\Delta)\varphi\,dt = \int_\Omega f\varphi\,dt + \int_{\Gamma_1} g\varphi\,dt - \int_{\Gamma_0} v\frac{\partial\varphi}{\partial n}\,dt. \tag{4.16}$$

Replace v in (4.16) by θv ($|\theta| < 1$) and 0, denote the resulting equations by $(*)$ and $(**)$ respectively, and then subtract $(**)$ from $(*)$, to get

$$\int_\Omega [y(\theta v) - y(0)]\psi\,dt = -\int_{\Gamma_0} \theta v\frac{\partial\varphi}{\partial n}\,dt.$$

Furthermore, if we subtract $(**)$ from (4.16), then

$$\int_\Omega [y(v) - y(0)]\psi\,dt = -\int_{\Gamma_0} v\frac{\partial\varphi}{\partial n}\,dt.$$

But the last two equations yield

$$\int_\Omega \left\{\frac{y(\theta v) - y(0)}{\theta} - [y(v) - y(0)]\psi\right\} dt = 0.$$

Since $\psi \in C_0^\infty$ is arbitrary and C_0^∞ is dense in E_N^0 (verified similarly to the density of C_0^∞ in L^p $(1 < p < \infty)$), and $A(v) = y(v)$, we find

$$\left\| \frac{A(\theta v) - A(0)}{\theta} - [A(v) - A(0)] \right\|_M = 0.$$

Letting $\theta \to 0$, we obtain $A'(0)(v) = A(v) - A(0)$. ∎

LEMMA 4.28. *Suppose that U_{ad} is a closed bounded convex subset of $L^2(\Gamma_0)$. Then $C = \{y(v) : v \in U_{\mathrm{ad}}\}$ is a weakly sequentially compact closed convex subset of L_M.*

Proof. Let $v', v'' \in C$. Then by Lemma 4.27,

$$\begin{aligned}\frac{1}{2}[y(v') + y(v'')] &= \frac{1}{2}[A'(0)v' + A(0)] + \frac{1}{2}[A'(0)v'' + A(0)] \\ &= A'(0)\left(\frac{v' + v''}{2}\right) + A(0) = y\left(\frac{v' + v''}{2}\right).\end{aligned}$$

Hence, C is convex, since U_{ad} is convex.

For any $v_n \in U_{\mathrm{ad}}$ $(n \in \mathbb{N})$, by the reflexivity of $L^2(\Gamma_0), \{v_n\}$ has a subsequence convergent to some $v \in U_{\mathrm{ad}}$ weakly. For convenience, say $v_n \to v$ weakly as $n \to \infty$. Since $A'(0)$ is linear and continuous, we have $A'(0)v_n \to A'(0)v$ weakly. So,

$$y(v_n) = A'(0)v_n + A(0) \xrightarrow{w} A'(0)v + A(0) = y(v).$$

Thus, C is weakly sequentially compact. ∎

THEOREM 4.29. *Let U_{ad} be a bounded closed convex subset of $L^2(\Gamma_0)$ and $J_h(v) = \|y(v) - h\|_M$ $(v \in U_{\mathrm{ad}})$. Then there exists a unique $v^* \in U_{\mathrm{ad}}$ such that*

$$J_h(v^*) = \inf\{J_h(v) : v \in U_{\mathrm{ad}}\}.$$

Proof. Set $C = \{y(v) : v \in U_{\mathrm{ad}}\}$. Then C is a weakly sequentially compact closed convex subset of L_M. So, by the rotundity of L_M, there exists a unique $y \in C$ such that $\|y - h\|_M = \inf\{\|y(v) - h\|_M : y(v) \in C\}$, i.e., there exists $v^* \in U_{\mathrm{ad}}$ such that $J_h(v^*) = \inf\{J_h(v) : v \in U_{\mathrm{ad}}\}$. If U_{ad} has another element v' satisfying $y(v') = y(v^*)$, then by the well known Trace Theorem, $v' = y(v') = y(v^*) = v^*$ on $x \in \Gamma_0$, so v^* is uniquely determined. ∎

COROLLARY 4.30. *Suppose $U_{\mathrm{ad}} = \{v(t) : m_1 \le v(t) \le m_2,\ t \in \Gamma_0\}$ and $h \in L^2$. Then there exists a unique $v^* \in U_{\mathrm{ad}}$ such that*

$$J_h(v^*) = \inf\{J_h(v) : v \in U_{\mathrm{ad}}\},$$

where $J_h(v) = \|y(v) - h\|_{L^2}$.

Proof. Take $M = u^2/2$. ∎

Employing Theorem 4.3, we obtain

COROLLARY 4.31. *Let $h \notin C$. Then $v^* \in U_{\mathrm{ad}}$ satisfies $J_h(v^*) = \inf\{J_h(v) : v \in U_{\mathrm{ad}}\}$ iff for all $v \in U_{\mathrm{ad}}$,*

$$\int_\Omega [y(v^*) - y(v)] p\left(\frac{|h - y(v^*)|}{\|h - y(v^*)\|_M}\right) \operatorname{sign}[h - y(v^*)]\, dt \ge 0.$$

Notes and remarks. Except Example 4.10 and Theorem 4.11 due to R. B. Darst, D. A. Legg & D. W. Townsend [65], all results in §4.1 are taken from Y. Wang & S. Chen [266], and their paper [267] covers Theorems 4.29 and Corollary 4.31. Theorem 4.12 and 4.17 are due to Y. Wang [263] while Lemma 4.15 was proved by R. B. Darst & G. A. Deboth [64] and Theorem 4.18 is taken from D. Landers & L. Rogge [159]. Proposition 4.20 and Theorem 4.21 were given by T. Wang, D. Ji & Y. Li [236] just after Y. Duan & S. Chen [75] presented a necessary and a sufficient condition for an operator to be a predictor. Theorem 4.23 is due to T. Wang & Y. Wang [257]. Proposition 4.26(ii) is taken from Y. Wang & S. Chen [267] and the other three statements were calculated by the author while preparing the book.

5. Geometry of Musielak–Orlicz spaces

5.1. Musielak–Orlicz spaces. Let (T, Σ, μ) be a nonatomic measurable space. Suppose that a function $M : T \times [0, \infty) \to [0, \infty]$ satisfies

$(*)$ for μ-a.e. $t \in T, M(t, 0) = 0$; $\lim_{u\to\infty} M\,(t, u) = \infty$ and $M(t, u') < \infty$ for some $u' > 0$;

$(**)$ for μ-a.e. $t \in T$, $M(t, u)$ is convex on $[0, \infty)$ with respect to u;

$(***)$ for each $u \in [0, \infty)$, $M(t, u)$ is a μ-measurable function of t on T.

Moreover, for a given Banach space $(X, \|\cdot\|)$, we denote by X_T the set of all strongly μ-measurable functions from T to X, and for each $x \in X_T$, define the modular of x by

$$\varrho_M(x) = \int_T M(t, \|x(t)\|)\, dt.$$

Then the *Musielak–Orlicz space*

$$L_M = \{x : \varrho_M(\lambda x) < \infty \text{ for some } \lambda > 0\}$$

with *Luxemburg norm*

$$\|x\|_M = \inf\{\lambda > 0 : \varrho_M(x/\lambda) \le 1\} \qquad (x \in L_M)$$

is a Banach space. Set

$$e(t) = \sup\{u \ge 0 : M(t, u) = 0\}, \qquad E(t) = \sup\{u \ge 0 : M(t, u) < \infty\}.$$

Then clearly, for almost all $t \in T$,

$$u \in [0, e(t)) \Rightarrow M(t, u) = 0, \qquad u > e(t) \Rightarrow M(t, u) > 0,$$
$$0 \le u < E(t) \Rightarrow M(t, u) < \infty, \qquad u > E(t) \Rightarrow M(t, u) = \infty.$$

PROPOSITION 5.1. *$e(t)$ and $E(t)$ are μ-measurable.*

Proof. Pick a dense set $\{r_k\}_{k=1}^{\infty}$ in $[0, \infty)$ and set

$$B_k = \{t \in T : M(t, r_k) = 0\}, \quad q_k(t) = r_k \chi_{B_k}(t) \qquad (k \in \mathbb{N}).$$

Then by $(***)$, B_k is μ-measurable and so is $q_k(t)$. Moreover, it is easy to see that for all $k \in \mathbb{N}$, $e(t) \ge q_k(t)$ μ-a.e. on T. Hence, to verify the measurability of $e(t)$, it suffices to show $e(t) \le \sup\{q_k(t) : k \ge 1\}$ μ-a.e. on T. For any $t \in T$ satisfying $(*)$, $(**)$ and $e(t) > 0$, arbitrarily choose $\varepsilon \in (0, e(t))$. Then there exists $r_k \in (e(t) - \varepsilon, e(t))$, whence $M(t, r_k) = 0$, i.e., $q_k(t) = r_k > e(t) - \varepsilon$. Since ε is arbitrary, we find $\sup_{k\ge1} q_k(t) \ge e(t)$.

Similarly, we can deduce the measurability of $E(t)$. ∎

Definition 5.2. We say that $M(t,u)$ satisfies condition Δ ($M \in \Delta$) if there exist $K \geq 1$ and a measurable nonnegative function $\delta(t)$ on T such that $\int_T M(t,\delta(t))\,dt < \infty$ and $M(t,2u) \leq KM(t,u)$ for almost all $t \in T$ and all $u \geq \delta(t)$.

Proposition 5.3. *If $M \in \Delta$, then $E(t) = \infty$ for μ-a.e. $t \in T$.*

Proof. Since $\int_T M(t,\delta(t))\,dt < \infty$, we have $\delta(t) \leq E(t)$ μ-a.e. on T. Suppose that $E = \{t \in T : E(t) < \infty\}$ is not a null set. We shall deduce an absurdity for each of the following two cases.

Case 1: $\mu\{t \in T : E(t) = \delta(t)\} > 0$. Since by $(*)$, for μ-a.e. $t \in T$, $E(t) > 0$, we have $2\delta(t) = 2E(t) > E(t)$ for almost all $t \in E$ satisfying $E(t) = \delta(t)$. Hence, $M(t,\delta(t)) < \infty$ and $M(t,2\delta(t)) = \infty$ for almost all such t. This contradicts $M \in \Delta$.

Case 2. If Case 1 is not true, then $E(t) > \delta(t)$ for almost all $t \in E$. Since by our assumption, $\mu E > 0$, we can find $\varepsilon > 0$ such that

$$E_\varepsilon = \{t \in E : E(t) - \varepsilon > \delta(t),\ 2(E(t) - \varepsilon) > E(t)\}$$

is not a null set. But for μ-a.e. $t \in E_\varepsilon$, we have $M(t,E(t)-\varepsilon) < \infty$ and $M(t,2(E(t)-\varepsilon)) = \infty$. This also contradicts $M \in \Delta$. ∎

For each p, $b > 1$, we define a function

$$h_{p,b}(t) = \begin{cases} \sup\{h : h \in E_t\} & \text{if } E(t) = \infty, \\ \infty & \text{if } E(t) < \infty, \end{cases}$$

where $E_t = \{u > 0 : M(t,bu) > pM(t,u)\}$, $t \in T$.

Lemma 5.4. *There exist μ-measurable functons $\{z_k(t)\}_k$ satisfying*

(i) $z_k(t) \uparrow_k h_{p,b}(t)$, $t \in T$,
(ii) $M(t,bz_k(t)) > pM(t,z_k(t))$ $(z_k(t) \neq 0)$.

Hence, $h_{p,b}(t)$ is μ-measurable on T.

Proof. Pick a dense set $\{r_i\}_{i\in\mathbb{N}}$ in $[0,\infty)$. For each $i \in \mathbb{N}$, set

$$r_i(t) = \begin{cases} r_i & \text{when } M(t,br_i) > pM(t,r_i), \\ 0 & \text{otherwise}, \end{cases}$$

and $z_1(t) = r_1(t)$,

$$z_{k+1}(t) = \begin{cases} r_{k+1}(t) & \text{when } r_{k+1}(t) > z_k(t), \\ z_k(t) & \text{otherwise} \end{cases} \qquad (k \in \mathbb{N}).$$

Then it suffices to check $\lim_{k\to\infty} z_k(t) \geq h_{p,b}(t)$.

Given $t \in T$, if $h_{p,b}(t) = 0$, then $z_k(t) = 0$ for all $k \in \mathbb{N}$. If $h_{p,b}(t) > 0$, then we can select $u_k > 0$ such that $u_k \uparrow_k h_{p,b}(t)$ and $M(t,bu_k) > pM(t,u_k)$ $(k \in \mathbb{N})$. For each $K \in \mathbb{N}$, by the continuity of $M(t,\cdot)$ on $[0,E(t))$ and the denseness of $\{r_k\}$, we may find $j \in \mathbb{N}$ such that $r_j \geq u_k$ and $M(t,br_j) > pM(t,r_j)$. Hence, by the definition of $\{z_k(t)\}$, for all $n > j$, we have $z_n(t) \geq r_j \geq u_k$. Therefore, $\lim_{k\to\infty} z_k(t) \geq h_{p,b}(t)$. ∎

Theorem 5.5. *The following are equivalent*:

(i) $M \notin \Delta$.
(ii) *For any $p,b > 1$, $\int_T M(t,h_{p,b}(t))\,dt = \infty$.*

(iii) $E = \{t \in T : E(t) < \infty\}$ *is a nonnull set or for any*

$$b_1 \geq b_2 \geq \ldots > 1, \quad 1 < p_1 \leq p_2 \leq \ldots, \quad q_n > 0 \quad (n \in \mathbb{N}),$$

there exist μ-measurable functions $\{x_n(t)\}_{n=1}^{\infty}$ and mutually disjoint $\{e_n\}_{n=1}^{\infty}$ in Σ such that $x_n(t) < \infty$ on e_n and

$$\int_{e_n} M(t, x_n(t))\, dt = q_n, \quad M(t, b_{k_n} x_n(t)) \geq p_{k_n} M(t, x_n(t)) \quad (t \in e_n,\ n \in \mathbb{N}),$$

where $\{k_n\}$ is a subsequence of $\mathbb{N}$.

(iv) *For each $\varepsilon \in (0,1)$, there exists $u \in L_M$ such that $\varrho_M(u) = \varepsilon$, $\|u\|_M = 1$ and $\|u(t)\| < E(t)$ μ-a.e. on T.*

(v) *There exists $u \in L_M$ such that $\varrho_M(u) < 1$, $\|u\|_M = 1$ and $\|u(t)\| < E(t)$ μ-a.e. on T.*

Proof. (i)⇒(ii). Suppose $\int_T M(t, h_{p,b}(t))\, dt < \infty$ for some $p, b > 1$. Pick $k \in \mathbb{N}$ such that $b^k \geq 2$. Since by the definition of $h_{p,b}(t)$, $u \geq h_{p,b}(t)$ implies $M(t, bu) \leq pM(t,u)$, we find

$$M(t, 2u) \leq M(t, b^k u) = p^k M(t, u),$$

contradicting (i).

(ii)⇒(iii). Assume $\mu E = 0$, i.e., $E(t) = \infty$ for almost all $t \in T$. For each $n \in \mathbb{N}$, by Lemma 5.4, there exist measurable $z_{n,k}(t) \uparrow_k h_{p_n,b_n}(t) \equiv h_n(t)$ satisfying

$$M(t, b_n z_{n,k}(t)) > p_n M(t, z_{n,k}(t)) \qquad (z_{n,k}(t) \neq 0,\ n \in \mathbb{N}),$$

Define $T_n = \{t \in T : h_n(t) = \infty\}$. Then $T_n \downarrow$ since it is obvious that $h_n(t) \downarrow$.

We construct the required $\{x_n\}$ in each of following three cases.

Case I: $\mu(\bigcap_{n=1}^{\infty} T_n) > 0$. In this case, we arbitrarily pick mutually disjoint sets $\{E_n\}$ in $\bigcap_{n=1}^{\infty} T_n$ with $\mu E_n > 0$. Since $z_{n,k}(t) \to \infty$ as $k \to \infty$ for all $t \in E_n$, we can find $k_n \in \mathbb{N}$ large enough and $e_n \in E_n$ such that $z_{n,k}(t) \neq 0$ on e_n and

$$\int_{e_n} M(t, z_{n,k_n}(t))\, dt = q_n.$$

Clearly, $x_n = z_{n,k_n}$ $(n \in \mathbb{N})$ satisfy all the requirements.

Case II: $\mu(\bigcap_{n=1}^{\infty} T_n) = 0$ but $\mu T_n > 0$ for all $n \in \mathbb{N}$. In this case, we can find a subsequence $\{n_j\}$ of N such that $\mu(T_{n_j} \setminus T_{n_{j+1}}) > 0$. Replacing $\{E_{n_j}\}$ in Case I by the mutually disjoint sets $T_{n_j} \setminus T_{n_{j+1}}$, we can find the required $\{e_j\}$ and $\{x_j\}$.

Case III. If Cases I, II do not hold, then $\mu T_i = 0$ for all large i. Without loss of generality, we assume $\mu T_i = 0$ for all $i \in \mathbb{N}$. Hence, $M(t, h_n(t)) < \infty$ μ-a.e. on T for all $n \in \mathbb{N}$. Since

$$\int_T M(t, z_{1,k}(t))\, dt \uparrow_k \int_T M(t, h_1(t))\, dt = \infty$$

we can find $k_1 \in \mathbb{N}$ and $e_1 \in \Sigma$ such that $z_{1,k_1}(t) \neq 0$ on e_1 and that

$$\int_{e_1} M(t, z_{1,k_1}(t))\, dt = q_1, \qquad \int_{e_1} M(t, h_1(t))\, dt < \infty.$$

Clearly,

$$\int_{T\setminus e_1} M(t,h_2(t))\,dt \ge \int_T M(t,h_2(t))\,dt - \int_{e_1} M(t,h_1(t))\,dt = \infty.$$

So, in the same way, we can find $k_2 > k_1$ and a subset e_2 of $T \setminus e_1$ such that $z_{2,k_2}(t) \ne 0$ on e_2 and

$$\int_{e_2} M(t,z_{2,k_2}(t))\,dt = q_2, \qquad \int_{e_2} M(t,h_2(t))\,dt < \infty,$$

and so on, by induction, we obtain the required $\{e_n\}$ and $\{x_n(t) = z_{n,k_n}(t)\}$.

(iii)⇒(iv). Set $b_n = 1 + 1/n$, $p_n = 2^n$, $q_n = \varepsilon 2^{-n}$ $(n \in \mathbb{N})$ and fix $\{x_n\}$ and $\{e_n\}$ in (iii). Then the function

$$u(t) = \begin{cases} x_n(t)e, & t \in e_n, n \in \mathbb{N}, \\ 0, & \text{otherwise}, \end{cases}$$

(where $e \in X$ satisfies $\|e\| = 1$) satisfies

$$\varrho_M(u) = \sum_{n=1}^{\infty} \int_{e_n} M(t,x_n(t))\,dt = \sum_{n=1}^{\infty} \varepsilon 2^{-n} = \varepsilon < 1$$

(which implies $\|u\|_M \le 1$). But for any $L > 1$,

$$\varrho_M(Lu) \ge \sum_{n=m}^{\infty} \int_{e_n} M(t,b_{k_n}x(t))\,dt > \sum_{n=m}^{\infty} 2^{k_n}\varepsilon 2^{-n} = \infty,$$

where $m \in \mathbb{N}$ satisfies $1 + 1/m \le L$. Thus, $\|u\|_M = 1$.

(iv)⇒(v). Trivial.

(v)⇒(i). Refer to the proof of Theorem 1.39. ■

Many results can be deduced for condition Δ as in Chapter I, for instance,

THEOREM 5.6. *The modular convergence and norm convergence are equivalent in L_M iff $M \in \Delta$.*

Proof. The necessity follows from Theorem 5.5 (iv). Now, we prove the sufficiency. Clearly, the norm convergence implies the modular convergence. To prove the converse, we assume $M \in \Delta$, $u_n \in L_M$ and $\varrho_M(u_n) \to 0$. Pick $k \ge 2$ and nonnegative $\delta(t)$ satisfying $\int_T M(t,\delta(t))\,dt < \infty$ and $M(t,2x) \le KM(t,x)$ for almost all $t \in T$ and all $x \ge \delta(t)$.

For arbitrary $\varepsilon > 0$, pick $m \in \mathbb{N}$ such that $2^m \ge 1/\varepsilon$. Then

$$\int_T M(t,\delta(t)/\varepsilon)\,dt \le K^m \int_T M(t,\delta(t))\,dt < \infty.$$

Define

$$T_n = \{t \in T : \|u_n(t)\| \le \delta(t)\}, \qquad y_n(t) = u_n(t)|_{T_n}.$$

Then $\|y_n(t)\| \le \delta(t)$, $t \in T$, $n \in \mathbb{N}$. But $\varrho_M(u_n) \to 0$ implies $M(t,\|u_n(t)\|) \to 0$ in measure, and by the Lebesgue Dominated Convergence Theorem,

$$\lim_{n\to\infty} \int_T M(t,\|y_n(t)\|/\varepsilon)\,dt = 0.$$

Hence, there exists $N' \in \mathbb{N}$ such that

$$\int_T M(t, \|y_n(t)\|/\varepsilon)\, dt < 1/2 \qquad (n > N').$$

Let $N'' \in \mathbb{N}$ satisfy $\varrho_M(u_n) < 1/(2K^m)$ $(n > N'')$. Then for all $n > \max\{N', N''\}$,

$$\begin{aligned}\varrho_M(u_k/\varepsilon) &\le \int_{T_n} M(t, \|y_n(t)\|/\varepsilon)\, dt + \int_{T\setminus T_n} M(t, 2^m\|u_n(t)\|)\, dt \\ &< 1/2 + K^m \int_{T\setminus T_n} M(t, \|u_n(t)\|)\, dt \le 1/2 + K^m \varrho_M(u_n) < 1.\end{aligned}$$

This means $\|u_n\| \le \varepsilon$ for all large n, and thus $u_n \to 0$ in norm. ■

5.2. Extreme points, rotundity and uniform rotundity. Without loss of generality, from now on, we assume $M(t, 0) = 0$ and $M(t, u)$ is convex on $[0, \infty)$ with respect to u for all $t \in T$.

For fixed $t \in T$ and $v > 0$, if there exists $\varepsilon \in (0, 1)$ such that

$$M(t, v) = 2^{-1}M(t, v + \varepsilon) + 2^{-1}M(t, v - \varepsilon) < \infty,$$

then we call v a *nonstrictly convex point* of M with respect to t if $e(t) > 0$. The set of all nonstrictly convex points of M with respect to t is denoted by K_t.

For $M(t, u)$, we introduce

$$M_0(t, u) = \begin{cases} \lim_{v\to E(t)-} M(t, v) & \text{if } u = E(t), \\ M(t, u) & \text{if } u \ne E(t). \end{cases}$$

PROPOSITION 5.7. *$M_0(t, u)$ and $M(t, u)$ have the same nonstrictly convex points.*

Proof. It is sufficient to observe that $E(t)$ is a strictly convex point of both $M(t, u)$ and $M_0(t, u)$. ■

PROPOSITION 5.8. *If $x \in B(L_M)$, then $\|x(t)\| \le E(t)$ μ-a.e. on T.*

Proof. If the assertion is not true, then there exists $\varepsilon > 0$ such that $A = \{t \in T : (1 - \varepsilon)\|x(t)\| > E(t)\}$ is a nonnull set. Since $M(t, u) = \infty$ for all $u > E(t)$, we find that

$$\varrho_M((1 - \varepsilon)x) \ge \int_A M(t, (1 - \varepsilon)\|x(t)\|)\, dt = \infty.$$

This shows $\|x\|_M \ge (1 - \varepsilon)^{-1} > 1$, a contradiction. ■

PROPOSITION 5.9. *$x \in B(L_M)$ iff $\varrho_{M_0}(x) \le 1$.*

Proof. Assume $x \in B(L_M)$. By Proposition 5.8, for each $\delta \in (0, 1)$, $\delta\|x(t)\| < E(t)$ μ-a.e. on T. Hence, by the definition of $M_0(t, u)$,

$$1 \ge \varrho_M(\delta x) = \int_T M_0(t, \delta\|x(t)\|)\, dt = \varrho_{M_0}(\delta x).$$

Letting $\delta \to 1-$, the Levi Theorem yields $1 \ge \varrho_{M_0}(x)$.

Conversely, if $\varrho_{M_0}(x) \le 1$, then for any $\delta \in (0, 1)$, we have $1 \ge \varrho_{M_0}(\delta x) = \varrho_M(\delta x)$, and thus, $\|x\|_M \le 1/\delta$. Since $\delta \in (0, 1)$ is arbitrary, we get $x \in B(L_M)$. ■

THEOREM 5.10. *$u \in S(L_M)$ is an extreme point of $B(L_M)$ iff*

(i) $\lim_{\delta\to 1-}\varrho_M(\delta u)=1$ *or* $\|u(t)\|=E(t)$ *μ-a.e. on* T,

(ii) $v,w\in X_T$ *with* $2u=v+w$ *and* $\|v(t)\|=\|w(t)\|=\|u(t)\|$ *μ-a.e. on* T *implies* $v=w$, *and*

(iii) $\mu\{t\in T:\|u(t)\|\in K_t\}=0$.

Proof. *Sufficiency.* Suppose that $u\in S(L_M)$ satisfies (i)–(iii) but $u\notin \operatorname{Ext}B(L_M)$, i.e., there exist $v,w\in B(L_M)$ such that $2u=v+w$ and $v\neq w$. Since for almost all $t\in T$,

$$2\|u(t))\|=\|v(t)+w(t)\|\le\|v(t)\|+\|w(t)\|,$$

by (ii), we have

$$0<\mu\{t\in T:v(t)\neq w(t)\}=\mu\{t\in T:\|v(t)\|>\|u(t)\| \text{ or } \|w(t)\|>\|u(t)\|\}.$$

Without loss of generality, we may assume $\mu H>0$, where $H=\{t\in T:\|v(t)\|>u(t)\|\}$. It follows from Proposition 5.8 that $\|u(t)\|<E(t)$ μ-a.e. on H. Thus, by (i) and the proof of Proposition 5.9,

$$\varrho_{M_0}(u)=\lim_{\delta\to 1-}\varrho_{M_0}(\delta u)=\lim_{\delta\to 1}\varrho_M(\delta u)=1.$$

We will derive a contradiction for each of the following two cases.

Case I: $\mu D>0$, where $D=\{t\in T:2\|u(t)\|<\|v(t)\|+\|w(t)\|\}$. Observing that $\varrho_{M_0}(u)=1$ implies $M_0(t,\|u(t)\|)<\infty$ for almost all $t\in T$, in this case, we have

$$M_0(t,\|u(t)\|)<M_0\left(t,\frac{\|v(t)\|+\|w(t)\|}{2}\right)\le\tfrac12 M_0(t,\|v(t)\|)+\tfrac12 M_0(t,\|w(t)\|)$$

for almost all $t\in D$. But this yields

$$\varrho_{M_0}(u|_D)<\tfrac12\varrho_{M_0}(v|_D)+\tfrac12\varrho_{M_0}(w|_D)\le 1$$

and thus, a contradiction (by Proposition 5.9):

$$1=\varrho_{M_0}(u)<\tfrac12\varrho_{M_0}(v)+\tfrac12\varrho_{M_0}(w)\le 1.$$

Case II: $\mu D=0$, i.e., $2\|u(t)\|=\|v(t)\|+\|w(t)\|$ μ-a.e. on T. By (iii), this implies

$$M_0(t,\|u(t)\|)<\tfrac12 M(t,\|v(t)\|)+\tfrac12 M(t,\|w(t)\|)$$

for μ-a.e. $t\in T$. As in Case I, we also have a contradiction: $1=\varrho_{M_0}(u)<1$.

Necessity. Let $u\in\operatorname{Ext}B(L_M)$. If (i) fails, then $\varrho_{M_0}(u)=\lim_{\delta\to 1-}\varrho_{M_0}(\delta u)=r<1$ and there exists $\lambda>0$ such that

$$A=\{t\in T:\|u(t)\|+\lambda<E(t)\}$$

is not a null set. Pick e in A such that $\mu e>0$ and

$$\int_e M(t,\|u(t)\|+\lambda)\,dt\le 1-r.$$

Let $x\in X$ satisfy $\|x\|=\lambda$ and define

$$(v(t),w(t))=\begin{cases}(u(t)+x,u(t)-x) & \text{if } t\in e,\\ (u(t),u(t)) & \text{if } t\in T\setminus e.\end{cases}$$

Then $v, w \in X_T$, $2u = v + w$ and $v \neq w$ since $x \neq 0$ and $\mu e > 0$. Moreover, from Proposition 5.9 and since

$$\begin{aligned}\varrho_{M_0}(v) &\le \int_e M_0(t, \|u(t)\| + \lambda)\, dt + \int_{T\setminus e} M_0(t, \|u(t)\|)\, dt \\ &\le (1 - r) + \varrho_{M_0}(u) = 1,\end{aligned}$$

we have $v \in B(L_M)$. Similarly, we can verify $w \in B(L_M)$, contradicting the hypothesis $u \in \operatorname{Ext} B(L_M)$.

The necessity of (ii) is obvious.

(iii) Set

$$\begin{aligned}H' &= \{t \in T : u(t) = 0,\ e(t) > 0\}, \\ H'' &= \{t \in T : 2M(t, \|u(t)\|) = M(t, \|u(t)\| + \varepsilon) + M(t, \|u(t)\| - \varepsilon) \\ &\qquad\qquad \text{for some } \varepsilon \in (0, \|u(t)\|)\}.\end{aligned}$$

Suppose that (iii) does not hold. Then $\mu H' > 0$ or $\mu H'' > 0$.

If $\mu H' > 0$, then for any $x \in S(X)$, by setting

$$(v(t), w(t)) = \begin{cases} (e(t)x, -e(t)x), & t \in H', \\ (u(t), u(t)), & t \in T \setminus H', \end{cases}$$

we have $v, w \in X_T$, $v \neq w$. Since $M_0(t, e(t)) = 0$ for all $t \in T$, by Proposition 5.9, we deduce that $\varrho_{M_0}(v) = \varrho_{M_0}(w) = \varrho_{M_0}(u) \le 1$, contradicting $u \in \operatorname{Ext} B(L_M)$.

If $\mu H'' > 0$, then we can find some $\varepsilon > 0$ such that

$$\begin{aligned}H = \{&t \in T : u(t) \neq 0, \\ &M(t, \|u(t)\|) = 2^{-1} M(t, (1+\varepsilon)\|u(t)\|) + 2^{-1} M(t, (1-\varepsilon)\|u(t)\|) < \infty\}\end{aligned}$$

is not a null set. Let

$$\alpha(t) = M(t, 1+\varepsilon)\|u(t)\|) - M(t, (1-\varepsilon)\|u(t)\|).$$

Pick two disjoint subsets E, F in H such that $\int_E \alpha(t)\, dt = \int_F \alpha(t)\, dt > 0$. Define

$$(v(t), w(t)) = \begin{cases} ((1+\varepsilon)u(t), (1-\varepsilon)u(t)), & t \in E, \\ ((1-\varepsilon)u(t), (1+\varepsilon)u(t), & t \in F, \\ (u(t), u(t)), & t \in T \setminus (E \cup F). \end{cases}$$

Then $v, w \in X_T$, $v \neq w$, $2u = v + w$. Furthermore, by the choice of E, F and the definition of H,

$$\int_{E\cup F} M(t, \|v(t)\|)\, dt = \int_{E\cup F} M(t, \|w(t)\|)\, dt = \int_{E\cup F} M(t, \|v(t)\|)\, dt.$$

Observing that $M(t, s)$ is affine on $[(1-\varepsilon)\|u(t)\|, (1+\varepsilon)\|u(t)\|]$ with respect to s for all $t \in H$, M can be replaced by M_0 in the above equalities, whence it is easily calculated that $\varrho_{M_0}(v) = \varrho_{M_0}(w) = \varrho_{M_0}(u) = 1$, also a contradiction to $u \in \operatorname{Ext} B(L_M)$. ∎

Remark. If X is a separable Banach space, then condition (ii) of Theorem 5.10 can be improved. In fact, in an unpublished paper, the author proved the following.

Suppose that X is a separable Banach space. Then

(a) for any $u \in S(L_M)$, the set $D_u = \{t \in \operatorname{supp} u : u(t)/\|u(t)\|_X \in \operatorname{Ext} B(X)\}$ is measurable,

(b) the condition (ii) of Theorem 5.10 is equivalent to $\operatorname{supp} u \setminus D_u$ being a null set.

THEOREM 5.11. *L_M is rotund iff*

(a) $M \in \Delta$,

(b) *X is rotund, and*

(c) *$M(t,u)$ is strictly convex with respect to u for almost all $t \in T$.*

Proof. *Sufficiency.* Let $u \in S(L_M)$. We have to verify (i)–(iii) of Theorem 5.10. Clearly, (b) and (c) imply (ii) and (iii) respectively, and (i) follows from (a) and the fact that Theorem 5.5 (v) implies $\lim_{\delta\to 1-} \varrho_M(\delta u) = \varrho_M(u) = 1$.

Necessity. (a) follows from Theorem 5.10 (i) and Theorem 5.5 (v).

If (b) is not true, then there exist $x, y, z \in S(X)$ with $2x = y + z$ and $y \neq z$. Pick $\alpha > 0$ such that $\int_T M(t,\alpha)\,dt \geq 1$. Then by (a), $M(t,\alpha) < \infty$ μ-a.e. on T, whence there exists $E \in \Sigma$ such that $\int_E M(t,\alpha)\,dt = 1$. Set

$$u(t) = \alpha x \chi_E(t), \quad v(t) = \alpha y \chi_E(t), \quad w(t) = \alpha z \chi_E(t).$$

Then $u, v, w \in X_T$, $2u = v + w$, $v \neq w$ and $\|u(t)\| = \|v(t)\| = \|w(t)\|$. But from

$$\varrho_M(u) = \varrho_M(v) = \varrho_M(w) = \int_E M(t,\alpha)\,dt = 1,$$

we see that $u, v, w \in S(L_M)$, and so u is not an extreme point of $B(L_M)$, contradicting the rotundity of L_M.

Pick a dense set $\{r_k\}_{k=1}^{\infty}$ in $(0,\infty)$. For each $n, k \in \mathbb{N}$, define a measurable set

$$G_{k,n} = \{t \in T : 2M(t,r_k) = M(t,(1+1/n)r_k) + M(t,(1-1/n)r_k)\}.$$

Then by the convexity of $M(t,u)$ with respect to u, we have

$$\bigcup_{k=1}^{\infty}\bigcup_{n=1}^{\infty} G_{k,n} = \{t \in T : K_t \neq \emptyset\}.$$

Hence, if (c) does not hold, then $\mu G_{k,n} > 0$ for some $k, n \in \mathbb{N}$. Since by (a), $M(t,r_k) < \infty$ for μ-a.e. $t \in T$, we may find some $r \in (0,1)$ and a subset B in $G_{k,n}$ such that $\int_B M(t,r_k)\,dt = r$. Find $d > 0$ and D in $T \setminus B$ such that $\int_D M(t,d)\,dt = 1 - r$ and define $u(t) = r_k x \chi_B(t) + d x \chi_D(t)$, where $x \in S(X)$. Then $u \in S(L_M)$ and $\mu B > 0$, $B \subset \{t \in T : \|u(t)\| \in K_t\}$. So, by Theorem 5.10 (iii), u is not an extreme point of $B(L_M)$. ∎

Finally, we investigate the uniform rotundity of L_M.

PROPOSITION 5.12. *Let X be a uniformly rotund Banach space. Then for any $\alpha > 0$, there exists $\varepsilon > 0$ such that $\|x - y\| \geq \alpha \max\{\|x\|, \|y\|\}$ implies*

$$\|x + y\| \leq (1-\varepsilon)(\|x\| + \|y\|) \quad \textit{or} \quad |\|x\| - \|y\|| \geq \varepsilon \max\{\|x\|, \|y\|\}.$$

Proof. Otherwise, there exist $\alpha > 0$ and $x_n, y_n \in X$ such that

$$\|x_n - y_n\| \geq \alpha \max\{\|x_n\|, \|y_n\|\}, \qquad \|x_n + y_n\| > (1 - 1/n)(\|x_n\| + \|y_n\|)$$

and

$$|\,\|x_n\| - \|y_n\|\,| < n^{-1}\max\{\|x_n\|, \|y_n\|\}.$$

Set $\max\{\|x_n\|, \|y_n\|\} = \alpha_n$. Then $x_n/\alpha_n \in B(X)$, $\|x_n/\alpha_n - y_n\alpha/_n\| \geq \alpha > 0$ and $\|x_n/\alpha_n - y_n/\alpha_n\| \to 2$, contradicting the uniform rotundity of X. ∎

PROPOSITION 5.13. *Suppose $M \in \Delta$ and $e(t) = 0$ μ-a.e. on T. Then*

$$\varrho_M(u_n) \to 0 \Leftrightarrow \|u_n\|_M \to 0, \quad \varrho_M(u_n) \to 1 \Leftrightarrow \|u_n\|_M \to 1 \quad (n \to \infty).$$

Proof. Similar to the proof of Theorem 1.39. ∎

For each $\varepsilon, c \in (0,1)$ and $t \in T$, set

$$E_t = \left\{(u,v) : u, v \geq 0, |u-v| \geq \varepsilon\max(u,v), M\left(t, \frac{u+v}{2}\right) > (1-c)\frac{M(t,u)+M(t,v)}{2}\right\}$$

and $P_{\varepsilon,c}(t) = \sup\{u - v : (u,v) \in E_t\}$. Then we have

PROPOSITION 5.14. *Fix $\varepsilon \in (0,1)$. Then for each $c \in (0,1)$, there exist measurable functions $\{u_k^c, v_k^c\}_{k-1}^{\infty}$ satisfying*

(1) $|u_k^c(t) - v_k^c(t)| \uparrow_k P_{\varepsilon,c}(t)$, $t \in T$,
(2) $u_k^c(t) \neq v_k^c(t)$ *implies*

$$M\left(t, \frac{u_k^c(t) - v_k^c(t)}{2}\right) > \frac{1}{2}\max\{M(t, \varepsilon u_k^c(t)), M(t, \varepsilon v_k^c(t))\}$$

and

$$M\left(t, \frac{u_k^c(t) - v_k^c(t)}{2}\right) > (1-c)\frac{M(t, \in u_k^c(t)), M(t, \in v_k^c(t))}{2}.$$

Proof. Analogous to the proof of Lemma 5.4. ∎

THEOREM 5.15. *The following are equivalent*:

(i) *L_M is uniformly rotund.*
(ii) *$M \in \Delta$, X is uniformly rotund, $e(t) = 0$ μ-a.e. on T and for any $\varepsilon \in (0,1)$, $\lim_{c\to 0}\int_T M(t, P_{\varepsilon,c}(t))\,dt = 0$.*
(iii) *$M \in \Delta$, X is uniformly rotund, $e(t) = 0$ μ-a.e. on T and for any $\varepsilon > 0$, there exist $\delta > 0$ and $f(t) \geq 0$ with $\int_T M(t, f(t))\,dt \leq \varepsilon$ such that for almost all $t \in T$ and all $x, y \geq 0$, $|x-y| \geq \varepsilon\max\{x,y\}$ and $|x-y| \geq f(t)$ implies*

$$M\left(t, \frac{x+y}{2}\right) \leq \frac{1-\delta}{2}[M(t,x) + M(t,y)].$$

Proof. (i)⇒(ii). By Theorem 5.11, $M \in \Delta$ and $e(t) = 0$ μ-a.e. on T. If X is not uniformly rotund, then there exist $x_n, y_n \in S(X)$ such that $\|x_n + y_n\| > 2(1 - 1/n)$ and $\|x_n - y_n\| \geq \varepsilon$ for some $\varepsilon > 0$ and all $n \in \mathbb{N}$. Since $M \in \Delta$, we can find $\alpha > 0$ and $E \in \Sigma$ such that $\int_E M(t,\alpha)\,dt = 1$. Define

$$(u_n(t), v_n(t)) = \alpha\chi_E(t)(x_n, y_n) \qquad (n \in \mathbb{N}).$$

Then $u_n, v_n \in X_T$ and

$$\varrho_M(u_n) = \varrho_M(v_n) = \int_E M(t,\alpha)\,dt = 1.$$

Hence, $u_n, v_n \in S(L_M)$. Moreover, since

$$\varrho_M\left(\frac{u_n - v_n}{\varepsilon}\right) = \int_E M\left(t, \frac{\alpha}{\varepsilon}\|x_n - y_n\|\right) dt \geq \int_E M(t,\alpha)\, dt = 1,$$

we have $\|u_n - v_n\|_M \geq \varepsilon$. But from

$$\varrho_M\left(\frac{u_n + v_n}{2(1-1/n)}\right) = \int_E M\left(t, \frac{\alpha\|x_n + y_n\|}{2(1-1/n)}\right) dt \geq \int_E M(t,\alpha)\, dt = 1,$$

we deduce that $\|u_n + v_n\|_M \geq 2(1-1/n) \to 2$ as $n \to \infty$, which contradicts (i).

Next we show $\lim_{c\to 0}\int_T M(t, P_{\varepsilon,c}(t))\, dt = 0$. If this does not hold, then by Proposition 5.14, there exist $\delta > 0$ and $c_n \downarrow 0$ such that

$$\varrho_M\left(\frac{u_n - v_n}{2}\right) > \delta \qquad (n \in \mathbb{N}),$$

where $u_n = u_{k_n}^{c_n}$ and $v_n = v_{k_n}^{c_n}$ $(n \in \mathbb{N})$ satisfy all the conditions of Proposition 5.14. By Theorem 5.6, there exists $h \in (0,\delta)$ such that $\varrho_M(u) \leq h$ implies $\|u\|_M \leq \varepsilon$. Pick e_n contained in $\{t \in T : u_n(t) \neq v_n(t)\}$ such that

$$\int_{e_n} M\left(t, \frac{|u_n(t) - v_n(t)|}{2}\right) dt = h.$$

Observing that $u_n(t) \neq v_n(t)$ implies

$$M\left(t, \frac{|u_n(t) - v_n(t)|}{2}\right) \geq \frac{1}{2}\max\{M(t, \varepsilon u_n(t)), M(t, \varepsilon v_n(t))\},$$

from

$$\int_{e_n} M(t, \varepsilon u_n(t))\, dt \leq \int_{e_n} M\left(t, \frac{|u_n(t) - v_n(t)|}{2}\right) dt = h,$$

we find that $\|\varepsilon u_n x \chi_{e_n}\|_M \leq \varepsilon$ or equivalently, $\|\varepsilon u_n x \chi_{e_n}\|_M \leq 1$, where $x \in S(X)$. Similarly, we also have $\|v_n x \chi_{e_n}\|_M \leq 1$. Set

$$T_1 = \{t \in e_n : M(t, u_n(t)) \geq M(t, v_n(t))\}, \qquad T_2 = e_n \setminus T_1.$$

Then

$$\int_{T_1} [M(t, u_n(t)) - M(t, v_n(t))]\, dt = \alpha_1 \geq 0,$$

$$\int_{T_2} [M(t, v_n(t)) - M(t, u_n(t))]\, dt = \alpha_2 \geq 0.$$

From the first inequality, we can find $E_1 \subset T_1$ such that

$$\int_{E_1} [M(t, u_n(t)) - M(t, v_n(t))]\, dt = \alpha_1/2,$$

or equivalently,

$$\int_{E_1} (t, v_n(t))\, dt + \int_{T_1\setminus E_1} M(t, v_n(t))\, dt = \int_{T_1\setminus E_1} M(t, u_n(t))\, dt + \int_{E_1} M(t, v_n(t))\, dt.$$

Similarly, we can find $E_2 \subset T_2$ such that

$$\int_{E_2} M(t, v_n(t))\,dt + \int_{T_2 \setminus E_2} M(t, u_n(t))\,dt = \int_{T_2 \setminus E_2} M(t, v_n(t))\,dt + \int_{E_2} M(t, u_n(t))\,dt.$$

Hence, if we define

$$(x_n'(t), y_n'(t)) = \begin{cases} (u_n(t), v_n(t))x, & t \in E_1 \cup (T_2 \setminus E_2), \\ (v_n(t), u_n(t))x, & t \in E_2 \cup (T_1 \setminus E_1), \\ (0,0), & \text{otherwise}, \end{cases}$$

then, from the above equalities and

$$\int_{E_n} M(t, u_n(t))\,dt \le 1, \qquad \int_{E_n} M(t, v_n(t))\,dt \le 1,$$

we obtain $0 < \varrho_M(x_n') = \varrho_M(y_n') = \beta \le 1$. Since $\mu(T \setminus e_n) > 0$, we can find $\delta > 0$ and $F_n \subset T \setminus e_n$ such that

$$\int_{F_n} M(t, \sigma)\,dt = 1 - \beta.$$

Now, let

$$(x_n(t), y_n(t)) = \begin{cases} (x_n'(t), y_n'(t)), & t \in T \setminus F_n, \\ (x, x), & t \in F_n. \end{cases}$$

Then it is easily calculated that $\varrho_M(x_n) = \varrho_M(y_n) = 1$. So, $x_n, y_n \in S(L_M)$. On the other hand,

$$\left\| \frac{x_n - y_n}{2} \right\|_M \ge \varrho_M\left(\frac{x_n - y_n}{2}\right) = \int_{e_n} M\left(t, \frac{u_n(t) - v_n(t)}{2}\right) dt = h > 0,$$

and moreover,

$$\begin{aligned} \left\| \frac{x_n + y_n}{2} \right\|_M &\ge \varrho_M\left(\frac{x_n + y_n}{2}\right) = \int_{e_n} M\left(t, \frac{u_n(t) + v_n(t)}{2}\right) dt + \int_{F_n} M(t, 1)\,dt \\ &\ge (1 - c_n) \int_{e_n} \frac{M(t, u_n(t)) + M(t), v_n(t))}{2}\,dt + \int_{F_n} M(t, 1)\,dt \\ &\ge (1 - c_n) \frac{\varrho_M(x_n) + \varrho_M(y_n)}{2} = 1 - c_n \to 1 \qquad (n \to \infty). \end{aligned}$$

This contradicts (i).

(ii)$\Rightarrow$(iii). Assume that (ii) holds. Pick $c > 0$ small enough such that $\int_T M(t, P_{\varepsilon,c}(t))\,dt < \varepsilon$ and set $f(t) = P_{\varepsilon,c}(t)$, $\delta = c$. Then (iii) is true by the definition of $P_{\varepsilon,c}(t)$.

(iii)$\Rightarrow$(i). For any $\varepsilon > 0$, by Proposition 5.13, there exists $h \in (0,1)$ such that $\|u\|_M \ge r$ implies $\varrho_M(u) \ge h$. For $\alpha = h/3$, take $\varepsilon \in (0, h/3)$ satisfying the condition of Proposition 5.12. Then, for this ε, we select $\delta \in (0,1)$ and a measurable function $f(t)$ in (iii). Finally, by Proposition 5.13, we can find $\gamma > 0$ such that

$$\varrho_M(u) \le 1 - \frac{h}{3} \min\{\varepsilon, \delta\} \Rightarrow \|u\|_M < 1 - \gamma.$$

Now, given $u, v \in S(L_M)$ with $\|u + v\|_M \ge 2r$, we complete the proof by showing $\|u + v\|_M \le 2(1 - \gamma)$. First we have $\varrho_M((u - v)/2) > h$. Set

$$A = \{t \in T : \|u(t) + v(t)\| \le \alpha \max\{\|u(t)\|, \|v(t)\|\}\}, \qquad B = T \setminus A.$$

Then the convexity of $M(t,s)$ with respect to s implies

$$\int_A M\left(t, \frac{\|u(t)-v(t)\|}{2}\right) dt \le \int_A M\left(t, \frac{\alpha\|u(t)\|+\alpha\|v(t)\|}{2}\right) dt$$
$$\le \frac{\alpha}{2}\int_A [M(t,\|u(t)\|)+M(t,\|v(t)\|)]\,dt \le \alpha = \frac{h}{3}.$$

Let $E = \{t \in B : |\,\|u(t)\| - \|v(t)\|\,| \le f(t)\}$ and $F = B \setminus E$. Then

$$\int_E M\left(t, \left|\frac{\|u(t)\|-\|v(t)\|}{2}\right|\right) dt \le \int_E M\left(t, \frac{1}{2}f(t)\right) dt < \varepsilon < \frac{h}{3}.$$

Hence,

$$\frac{1}{2}\int_E [M(t,\|u(t)\|)+M(t,\|v(t)\|)]\,dt \ge \int_E M\left(t, \frac{\|u(t)\|-\|v(t)\|}{2}\right) dt$$
$$= \varrho_M\left(\frac{u-v}{2}\right) - \int_{A\cup E} M\left(t, \frac{\|u(t)\|-\|v(t)\|}{2}\right) dt$$
$$> h - \tfrac{2}{3}h = \tfrac{1}{3}h.$$

Set

$$F_1 = \{t \in F : \|u(t)+v(t)\| \le (1-\varepsilon)(\|u(t)\|+\|v(t)\|)\}, \qquad F_2 = F \setminus F_1.$$

Then $t \in F_2$ implies

$$\|u(t)-v(t)\| \ge \alpha \max\{\|u(t)\|, \|v(t)\|\}, \qquad \|u(t)+v(t)\| > (1-\varepsilon)(\|u(t)\|+\|v(t)\|)$$

and $|\,\|u(t)\| - \|v(t)\|\,| > f(t)$. Furthermore, by Proposition 5.12, we also have $|\,\|u(t)\| - \|v(t)\|\,| \ge \varepsilon \max\{\|u(t)\|, \|v(t)\|\}$. It follows from (iii) that

$$\int_F M\left(t, \frac{\|u(t)+v(t)\|}{2}\right) dt \le \int_{F_1} M\left(t, (1-\varepsilon)\frac{\|u(t)\|+\|v(t)\|}{2}\right) dt$$
$$+ \int_{F_2} (1-\delta)\frac{M(t,\|u(t)\|)+M(t,\|v(t)\|)}{2}\,dt$$
$$\le \frac{1-\min\{\varepsilon,\delta\}}{2}\int_F [M(t,\|u(t)\|)+M(t,\|v(t)\|)]\,dt.$$

Thus,

$$\varrho_M\left(\frac{u+v}{2}\right) \le \frac{1}{2}\int_{T\setminus F} [M(t,\|u(t)\|)+M(t,\|v(t)\|)]\,dt$$
$$+\frac{1}{2}(1-\min\{\varepsilon,\delta\})\int_F [M(t,\|u(t)\|)+M(t,\|v(t)\|)]\,dt$$
$$= \frac{1}{2}[\varrho_M(u)+\varrho_M(v)] - \frac{1}{2}\min\{\varepsilon,\delta\}\int_F [M(t,\|u(t)\|)+M(t,\|v(t)\|)]\,dt$$
$$\le 1 - 3^{-1}h\min\{\varepsilon,\delta\}.$$

This implies $\|u+v\|_M \le 2(1-\gamma)$. ∎

5.3. Complex rotundities. Let E be a complex Banach space over the complex field $\mathbb{C}$. A point x in a subset A of E is called a *complex extreme point* of A provided that

$$\{x+\lambda y : \lambda \in \mathbb{C},\ |\lambda| \le 1\} \subset A \Rightarrow y = 0.$$

If every point in $S(E)$ is a complex extreme point of $B(E)$, then E is said to be *complex rotund*. Furthermore, if for any $\varepsilon > 0$, there exists $\delta > 0$ such that

$$x, y \in E,\ \lambda \in \mathbb{C},\ \|y\| > \varepsilon,\ |\lambda| \le 1,\ \|x+\lambda y\| \le 1 \Rightarrow \|x\| \le 1-\delta,$$

then E is defined to be a *complex uniformly rotund space*.

PROPOSITION 5.16. *The following are equivalent*:

(i) *E is complex rotund.*

(ii) *For any $x, y \in E$, $y \ne 0$, there exists $\lambda \in \mathbb{C}$ with $|\lambda| \le 1$ such that $\|x+\lambda y\| > \|x\|$.*

(iii) *For any $x, y \in E$, $y \ne 0$, there exists $\lambda \in \mathbb{C}$ with $|\lambda| \le 1$ such that $\|x+\lambda y\| + \|x-\lambda y\| > 2\|x\|$.*

Proof. (i)⇒(ii). Without loss of generality, we may assume $x \ne 0$. If $\|x+\lambda y\| \le \|x\|$ for all $\lambda \in \mathbb{C}$ satisfying $|\lambda| \le 1$, then $\|x/\|x\| + \lambda y/\|x\|\,\| \le 1$ holds for all $\lambda \in \mathbb{C}$ satisfying $|\lambda| \le 1$. It follows from (i) that $y = 0$.

(ii)⇒(iii). If (iii) is not true, then there exist $x, y \in E$ with $y \ne 0$ such that

$$\|x+\lambda y\| + \|x-\lambda y\| = 2\|x\| \qquad (\lambda \in \mathbb{C}, |\lambda| \le 1).$$

Pick $f \in S(E^*)$ such that $f(x) = \|x\|$. Then $\lambda \in \mathbb{C}$, $|\lambda| \le 1$ implies

$$\begin{aligned} 2\|x\| = 2f(x) = 2\operatorname{Re} f(x) &= \operatorname{Re} f(x+\lambda y) + \operatorname{Re} f(x-\lambda y) \le |f(x+\lambda y)| + |f(x-\lambda y)| \\ &\le \|x+\lambda y\| + \|x-\lambda y\| = 2\|x\|. \end{aligned}$$

This implies

$$\operatorname{Re} f(x+\lambda y) + \operatorname{Re} f(x-\lambda y) = \|x+\lambda y\| + \|x-\lambda y\|.$$

But $\operatorname{Re} f(x\pm\lambda y) \le |f(x\pm\lambda y)| \le \|x\pm\lambda y\|$, whence $\operatorname{Re} f(x+\lambda y) \le |f(x+\lambda y)| \le \|x+\lambda y\|$, which implies $\operatorname{Im}[f(x)+\lambda f(y)] = \operatorname{Im}\lambda f(y) = 0$. Since $\lambda \in \mathbb{C}$ with $|\lambda| \le 1$ is arbitrary, we find that $f(y) = 0$ and thus, $\|x+\lambda y\| = \|x\|$. It follows from (ii) that $y = 0$, a contradiction.

(iii)⇒(i). Let $x \in S(E)$. If there exists $y \in E$ such that $\lambda \in \mathbb{C}$, $|\lambda| \le 1$ implies $\|x+\lambda y\| \le 1$, then we also have $\|x-\lambda y\| \le 1$. Hence, $2 = 2\|x\| \le \|x+\lambda y\| + \|x-\lambda y\| \le 2$. By (iii), we have $y = 0$. Hence, x is a complex extreme point of $B(E)$. ∎

PROPOSITION 5.17. *E is complex uniformly rotund iff for any $\varepsilon > 0$, there exists $\delta > 0$ such that for any $x, y \in E$,*

$$\|y\| \ge \varepsilon \max\{\|x+y\|, \|x-y\|, \|x+iy\|, \|x-iy\|\}$$

implies

$$\|x\| \le 4^{-1}(1-\delta)(\|x+y\| + \|x-y\| + \|x+iy\| + \|x-iy\|).$$

Proof. The sufficiency is trivial. If the necessity does not hold, then there exist $\varepsilon > 0$ and $x_n, y_n \in E$ such that $\|y_n\| \ge \varepsilon$ but

$$\max\{\|x_n+y_n\|, \|x_n-y_n\|, \|x_n+iy_n\|, \|x_n-iy_n\|\} = 1$$

and

$$\|x\| \le 4^{-1}(\|x_n+y_n\|+\|x_n-y_n\|+\|x_n+iy_n\|+\|x_n-iy_n\|)-1/n \qquad (n\in\mathbb{N}).$$

For each $n\in\mathbb{N}$, pick $f_n\in S(E^*)$ such that $f_n(x_n)=\|x_n\|$. Then

$$\begin{aligned}4\|x_n\| &= 4f_n(x_n) = 4\operatorname{Re} f_n(x_n)\\ &= \operatorname{Re} f_n(x_n+y_n)+\operatorname{Re} f_n(x_n-y_n)+\operatorname{Re} f_n(x_n+iy_n)+\operatorname{Re} f_n(x_n-iy_n)\\ &\le |f_n(x_n+y_n)|+|f_n(x_n-y_n)|+|f_n(x_n+iy_n)|+|f_n(x_n-iy_n)|\\ &\le \|x_n+y_n\|+\|x_n-y_n\|+\|x_n+iy_n\|+\|x_n-iy_n\| \le 4\|x_n\|+4/n\\ &= \operatorname{Re} f_n(x_n+y_n)+\operatorname{Re} f_n(x_n-y_n)+\operatorname{Re} f_n(x_n+iy_n)+\operatorname{Re} f_n(x_n-iy_n))+4/n.\end{aligned}$$

Combining this with $|f_n(x_n+ky_n)|\le\|x_n+ky_n\|$ and

$$\operatorname{Re} f_n(x_n+ky_n)\le|f_n(x_n+ky_n)| \qquad (k=1,-1,i,-i),$$

we find that

$$f_n(x_n+ky_n)\ge\|x_n+ky_n\|-4/n \quad\text{and}\quad |f_n(x_n+ky_n)|\le\operatorname{Re} f_n(x_n+ky_n)+4/n.$$

Hence we deduce that

$$\begin{aligned}\operatorname{Im} f_n(x_n+ky_n) &= \operatorname{Im} kf_n(y_n)\le(8n^{-1}\operatorname{Re} f_n(x_n+ky_n)+4/n^2)^{1/2}\\ &\le(8/n+4/n^2)^{1/2}\le(12/n)^{1/2} \qquad (k=1,-1,i,-i).\end{aligned}$$

This shows that

$$\operatorname{Re} f_n(y_n)\le(12/n)^{1/2}, \qquad |\operatorname{Im} f_n(y_n)|\le(12/n)^{1/2}$$

and thus, $|f_n(y_n)|\le(24/n)^{1/2}$. But this implies

$$\begin{aligned}\|x_n+ky_n\|-4/n &\le |f_n(x_n+ky_n)|\le|f_n(x_n)|+|f_n(ky_n)|\\ &= \|x_n\|+|f_n(y_n)|\le\|x_n\|+(24/n)^{1/2} \qquad (k=1,-1,i,-i),\end{aligned}$$

so, by picking a proper k such that $\|x_n+ky_n\|=1$, we derive $\|x_n\|\ge 1-4/n-(42/n)^{1/2}\to 1$, contradicting the complex uniform rotundity of E. ∎

From now on, we assume that X is a complex Banach space, and so the associated Musielak-Orlilcz space L_M is also a complex Banach space.

THEOREM 5.18. *$x\in S(L_M)$ is a complex extreme point of $B(L_M)$ iff*

(i) $\lim_{\sigma\to 1-}\varrho_M(\sigma x)=1$ *or* $\|x(t)\|=E(t)$ *μ-a.e. on T, and*
(ii) *for any $y\in L_M$ with $y\ne 0$, we have $\mu G_{xy}=0$, where*

$$\begin{aligned}G_{xy}=\{t\in T: y(t)\ne 0 \text{ and } 2M_0(t,\|x(t)\|)&=M_0(t,\|x(t)+\lambda y(t)\|)\\ &+M_0(t,\|x(t)-\lambda y(t)\|) \text{ for all } \lambda\in\mathbb{C} \text{ with } |\lambda|\le 1\}.\end{aligned}$$

Proof. $\Leftarrow$ First we assume that $\|x(t)\|=E(t)$ μ-a.e. on T. For fixed $y\in L_M$, if $\|x+\lambda y\|_M\le 1$ for all $\lambda\in\mathbb{C}$ with $|\lambda|\le 1$, then by Proposition 5.9, $\|x(t)+\lambda y(t)\|\le E(t)=\|x(t)\|$ μ-a.e. on T. It follows that

$$M_0(t,\|x(t)+\lambda y(t)\|)+M_0(t,\|x(t)-\lambda y(t)\|)\le 2M_0(t,\|x(t)\|)$$

μ-a.e. on T. Hence, by the convexity of $M_0(t,u)$ with respect to u, the two sides of the above inequality are equal for almost all t in T. By applying (ii), we deduce that $y=0$ and thus, x is a complex extreme point of $B(L_M)$.

Next we assume $\varrho_{M_0}(x)=\lim_{\sigma\to 1-}\varrho_M(\sigma x)=1$. Let $y\in L_M$ and $\|x+\lambda y\|_M\le 1$ for all $\lambda\in\mathbb{C}$ with $|\lambda|\le 1$. Again by Proposition 5.9, we have $\varrho_{M_0}(x+\lambda y)\le 1$. Therefore,

$$1=\varrho_{M_0}(x)=\int_T M_0(t,\|x(t)\|)\,dt\le 2^{-1}\varrho_{M_0}(x+\lambda y)+2^{-1}\varrho_{M_0}(x-\lambda y)\le 1.$$

As in the first case, we also deduce $y=0$.

$\Rightarrow$ The necessity of (i) can be verified as the corresponding part of Theorem 5.10. If (ii) does not hold, then there exists $y\in L_M$ such that $\mu G_{xy}>0$. Define

$$H'=\{t\in G_{xy}:\|x(t)\|<e(t)\},\qquad H''=\{t\in G_{xy}:\|x(t)\|\ge e(t)\}.$$

Then $G_{xy}=H'\cup H''$. First we assume $\mu H'>0$. Then there exists $r>0$ such that $E=\{t\in T:\|x(t)\|+r<e(t)\}$ is not a null set. Pick $u\in rS(x)$ and set $z(t)=u\chi_E(t)$. Then $z\ne 0$, $z\in L_M$ and for any $\lambda\in\mathbb{C}$ with $|\lambda|\le 1$, we have

$$\begin{aligned}\varrho_{M_0}(x+\lambda y)&\le\int_E M(t,\|x(t)\|+r)\,dt+\int_{T\setminus E}M_0(t,\|x(t)\|)\,dt\\&=\int_{T\setminus E}M_0(t,\|x(t)\|)\,dt\le\varrho_{M_0}(x)\le 1.\end{aligned}$$

This shows $\|x+\lambda y\|_M\le 1$, and so x is not a complex extreme point of $B(L_M)$.

If $\mu H'=0$, then $\mu H''>0$. Observing that $M(t,u)$ is strictly increasing on $[e(t),E(t)]$ with respect to u for almost all $t\in T$, by the definition of G_{xy} and H'', we find that

$$2\|x(t)\|=\|x(t)+\lambda y(t)\|+\|x(t)-\lambda y(t)\|\qquad(|\lambda|\le 1)$$

for all $\lambda\in\mathbb{C}$ with $|\lambda|\le 1$ and almost all $t\in T$. By using this equality and the method in (ii)$\Rightarrow$(iii) of Proposition 5.16, we can derive $\|x(t)\|=\|x(t)+\lambda y(t)\|$ for all $\lambda\in\mathbb{C}$ with $|\lambda|\le 1$ and almost all $t\in T$. Set $z(t)=y(t)|_{H''}$. Then $z\in L_M$, $z\ne 0$ and $\varrho_{M_0}(x+\lambda z)\le\varrho_{M_0}(x)\le 1$ for all $\lambda\in\mathbb{C}$ with $|\lambda|\le 1$. This shows that x is not a complex extreme point of $B(L_M)$. ■

THEOREM 5.19. *L_M is complex rotund iff* (i) $M\in\Delta$, (ii) *X is complex rotund, and* (iii) *$e(t)=0$ μ-a.e. on T.*

Proof. *Sufficiency.* Given $x\in S(L_M)$, we have to prove that it is a complex extreme point of $B(L_M)$. Clearly, (i) implies (i) of Theorem 5.18. It remains to check (ii) of Theorem 5.18. Let $y\in L_M$. By (iii), for μ-a.e. $t\in G_{xy}$,

$$2\|x(t)\|=\|x(t)+\lambda y(t)\|+\|x(t)-\lambda y(t)\|\qquad(|\lambda|\le 1).$$

By (ii) and Proposition 5.16, the above equality does not hold for any $t\in T$ satisfying $y(t)\ne 0$. This yields $\mu G_{xy}=0$.

Necessity. (i) is true by Theorem 5.18 and Theorem 5.5 (v). If (ii) fails, then there exist $u,v\in X$ with $\|u\|=1$ and $v\ne 0$ such that $\|u+\lambda v\|\le 1$ for all $\lambda\in\mathbb{C}$ with $|\lambda|\le 1$. Since we already have $M\in\Delta$, there exist $\alpha>0$ and $H\in\Sigma$ such that $\int_H M(t,\alpha)\,dt=1$.

Define

$$(x(t), y(t)) = \begin{cases} (\alpha u, \alpha v), & t \in H, \\ (0,0), & t \in T \setminus H. \end{cases}$$

Then $x, y \in L_M$ and $\varrho_M(x) = 1$. So, $\|x\|_M = 1$. But $t \in H$ implies

$$\|x(t) + \lambda y(t)\| = \alpha \|u + \lambda v\| \le \alpha = \|x(t)\| \qquad (|\lambda| \le 1).$$

Therefore, for μ-a.e. $t \in H$,

$$2M_0(t, \|x(t)\|) \le M_0(t, \|x(t)+\lambda y(t)\|) + M_0(t, \|x(t)-\lambda y(t)\|) \le 2M_0(t, \|x(t)\|) \quad (|\lambda| \le 1).$$

This shows $\mu G_{xy} = \mu H > 0$ and thus, by Theorem 5.18, x is not a complex extreme point of $B(L_M)$, a contradiction.

Finally, if (iii) does not hold, then we can find $b > 0$ and $A \in \Sigma$ such that $\int_A M_0(t, b)\, dt = 1$ and $\mu(\{t \in T : e(t) > 0\} \setminus A) > 0$. Pick $w, v \in X$ with $\|w\| = 1$, $\|v\| = 1/2$ and define

$$(x(t), y(t)) = \begin{cases} (w, 0), & t \in A, \\ (0, e(t)v), & t \in \{t \in T : e(t) \ge 0\} \setminus A, \\ (0,0), & \text{otherwise.} \end{cases}$$

Then $x, y \in L_M$, $\|x\| = 1$, $y \ne 0$ and $\varrho_{M_0}(x + \lambda y) = \int_A M(t, b)\, dt = 1$ for all $\lambda \in \mathbb{C}$ with $|\lambda| \le 1$. This shows that x is not a complex extreme point of $B(L_M)$, also a contradiction. ■

THEOREM 5.20. *L_M is complex uniformly rotund iff* (i) $M \in \Delta$, (ii) $e(t) = 0$ *μ-a.e. on T, and* (iii) *X is complex uniformly rotund.*

Proof. *Necessity.* According to Theorem 5.19, (i) and (ii) hold. If (iii) fails, then there exist $\varepsilon > 0$, $x_n, y_n \in X$ such that $\|x_n + \lambda y_n\| \le 1$ ($|\lambda| \le 1$), $\|y_n\| \ge \varepsilon$ ($n \in \mathbb{N}$) and $\|x_n\| \to 1$ as $n \to \infty$. Since (i) is true, we can pick $\alpha > 0$ and $H \in \Sigma$ such that $\int_H M(t, \alpha)\, dt = 1$. Define

$$(x_n(t), y_n(t)) = \begin{cases} (\alpha x_n, \alpha y_n), & t \in H, \\ (0,0), & t \in T \setminus H. \end{cases}$$

Then by (ii), $\varrho_M(y_n) \ge \int_H M(t, \alpha\varepsilon)\, dt > 0$ and

$$\varrho_M(x_n + \lambda y_n) = \int_H M(t, \|x_n + \lambda y_n\|)\, dt \le \int_H M(t, \alpha)\, dt = 1 \qquad (|\lambda| \le 1).$$

Combining this with

$$\lim_n \varrho_M(x_n) = \lim_n \int_H M(t, \alpha \|x_n\|)\, dt = \int_H M(t, \alpha)\, dt = 1,$$

we find that L_M is not complex uniformly rotund.

Sufficiency. Since $M \in \Delta$ and $e(t) = 0$ μ-a.e. on T, as in Theorem 1.39, we can easily deduce that $\varrho_M(x_n) \to 0 \Leftrightarrow \|x_n\|_M \to 0$ and $\varrho_M(x_n) \to 1 \Leftrightarrow \|x_n\|_M \to 1$ as $n \to \infty$. Therefore, to verify the sufficiency, it suffices to show that the modular $\varrho_M(\cdot)$ is complex uniformly rotund. For given $\varepsilon \in (0,1)$, by (iii) and Proposition 5.17, there exists $\delta > 0$ such that $x, y \in X$ and

$$\|y\| \ge (\varepsilon/8) \max\{\|x + ky\| : k = 1, -1, i, -i\}$$

implies

$$\|x\| \le \frac{1-\delta}{4}\sum_k \|x+ky\| \qquad (k=1,-1,i,-i).$$

Fix $x, y \in L_M$ with $\varrho_M(y) \ge \varepsilon$ and $\varrho_M(x+\lambda y) \le 1$ ($|\lambda| \le 1$). Let

$$A = \{t \in T : \|y(t)\| \ge (\varepsilon/8)\max\{\|x(t)+ky(t)\| : k=1,-1,i,-i\}\}.$$

Then

$$\begin{aligned}\int_{T\setminus A} M(t,\|y(t)\|)\,dt &\le (\varepsilon/8)\int_{T\setminus A} M(t,(8/\varepsilon)\|y(t)\|)\,dt\\ &\le (\varepsilon/8)\sum_k \int_{T\setminus A} M(t,\|x(t)+ky(t)\|)\,dt \le \varepsilon/2 \qquad (k=1,-1,i,-i).\end{aligned}$$

Hence, as

$$\sum_k \|x(t)+ky(t)\| = \sum_k \|x(t)+y(t)/k\| = \sum_k \|y(t)+kx(t)\| \qquad (k=1,-1,i,-i),$$

we obtain

$$\begin{aligned}\varepsilon/2 \le \int_A M(t,\|y(t)\|)\,dt &\le \int_A M\Big(t, 4^{-1}\sum_k \|x(t)+ky(t)\|\Big)\,dt\\ &\le 4^{-1}\sum_k \int_A M(t,\|x(t)+ky(t)\|)\,dt \qquad (k=1,-1,i,-i).\end{aligned}$$

It follows from the choice of δ and A that

$$\begin{aligned}\varrho_M(x) &\le \frac{1}{4}\sum_k \int_{T\setminus A} M(t,\|x(t)+ky(t)\|)\,dt + \frac{1-\delta}{4}\sum_k \int_A M(t,\|x(t)+ky(t)\|)\,dt\\ &\le 1-\frac{\delta}{4}\sum_k \int_A M(t,\|x(t)+ky(t)\|)\,dt \le 1-\frac{\delta}{4}\cdot\frac{\varepsilon}{2}.\end{aligned}$$

This proves the complex uniform rotundity of L_M. ∎

Notes and remarks. The concept of Musielak–Orlicz spaces was first introduced by J. Musielak. Such spaces can also be equipped with the Orlicz norm, and the Musielak–Orlicz sequence spaces are defined analogously.

A series of geometric properties for such spaces were discussed by many mathematicians, for instance, H. Hudzik [102]–[108] and A. Kamińska [138], [140], [141] and [143]. Except Theorem 5.15, which was taken from an unpublished paper by the author, all the results in this chapter come from C. Wu & S. Chen [281] and C. Wu & H. Sun [287], [290].

Bibliography

[1] G. Alherk, *On the non-$l_n^{(1)}$ and locally uniformly non-$l_n^{(1)}$ properties, and l^1 copies in Musielak–Orlicz spaces*, Comment. Math. Univ. Carolin. 31 (1990), 435–443.

[2] G. Alherk and H. Hudzik, *Uniformly non-$l_n^{(1)}$ Musielak–Orlicz spaces of Bochner type*, Forum Math. 1 (1989), 403–410.

[3] —, —, *Copies of l^1 and c_0 in Musielak–Orlicz sequence spaces*, Comment. Math. Univ. Carolin. 35 (1994) 9–19.

[4] T. Ando, *Linear functionals on Orlicz spaces*, Nieuw. Arch. Wisk. 8 (3) (1960), 1–16.

[5] —, *Weakly compact sets in Orlicz spaces*, Canad. J. Math. 14 (1962), 170–176.

[6] R. M. Aron and R. H. Lohman., *A geometric function determined by extreme points of the unit ball of a normed space*, Pacific J. Math. 2 (1987), 209–231.

[7] B. Beauzamy, *Introduction to Banach Spaces and Their Geometry*, Elsevier, Amsterdam, 1985.

[8] F. Bombal, *On l^1 subspaces of Orlicz vector-valued function spaces*, Math. Proc. Cambridge Philos. Soc. 107 (1987), 107–112.

[9] —, *On embedding l^1 as a complemented subspace of vector-valued function spaces*, Rev. Math. 3 (1988), 13–17.

[10] J. M. Borwein and B. Sims, *Nonexpansive mappings on Banach lattices and related topics*, Houston J. Math. 10 (1984), 339–356.

[11] D. W. Boyd, *Indices for Orlicz spaces*, Pacific J. Math. 38 (1971), 315–328.

[12] S. Chen, *Some rotundities of Orlicz spaces with Orlicz norm*, Bull. Polish Acad. Sci. Math. 34 (1986), 585–596.

[13] —, *Smoothness of Orlicz spaces*, Comment. Math. 27 (1987), 49–58.

[14] —, *Non-squareness of Orlicz spaces*, Chinese Ann. Math. 6A (1985), 607–613 (in Chinese).

[15] —, *On vector valued Orlicz spaces*, ibid. 5B (1984), 293–304.

[16] —, *Uniform rotundity of vector valued Orlicz spaces*, Pure Appl. Math. 3 (1987), 13–21 (in Chinese).

[17] —, *Extreme points and strict convexity of vector valued Orlicz spaces*, J. Math. (Wuhan) 5 (1985), 9–14.

[18] —, *Delta condition for some generalized Orlicz spaces*, Nature J. 4 (1981), 793 (in Chinese).

[19] —, *Locally uniform rotundity of Orlicz spaces*, Natur. Sci. J. Harbin Normal Univ. 1983 (2), 48–56 (in Chinese).

[20] —, *Local non-squareness of sequence Orlicz spaces*, ibid. 3 (1) (1987), 1–5 (in Chinese).

[21] —, *Smooth points of Orlicz spaces with Orlicz norm*, ibid. 5 (2) (1989), 1–4 (in Chinese).

[22] —, *On properties of locally uniform k-rotundity and uniform rotundity in every direction for Banach spaces*, ibid. 3 (3) (1987), 1–7 (in Chinese).

[23] —, *Some advances and problems on geometry of Orlicz spaces*, J. Baoji Teachers College 12 (2) (1989), 22–28 (in Chinese).

[24] S. Chen and Y. Duan, *WM property of Orlicz spaces*, Northeast. Math. J. 8 (1992), 498–502.

[25] S. Chen and Y. Duan, *WM property of Orlicz spaces with Orlicz norm*, Acta Math. Sci. (English Ed.) 14 (1994), 1–8.

[26] —, —, *On convex functions on sequence Orlicz spaces*, in: Collected Youth Sci. Articles, Heilongjiang Sci.&Tech. Press, 1990, 1–2.

[27] —, —, *Normal structure and weakly normal structure of Orlicz spaces*, Comment. Math. Univ. Carolin. 32 (1991), 219–225.

[28] —, —, *On block basis of sequence Orlicz spaces*, to appear.

[29] S. Chen and H. Hudzik, *On some convexities of Orlicz and Orlicz–Bochner spaces*, Comment. Math. Univ. Carolin. 29 (1988), 13–29.

[30] —, —, *On some properties of Musielak–Orlicz spaces and their subspaces of order continuous elements*, Period. Math. Hungar. 25 (1992), 13–20.

[31] —, —, *E^Φ and h^Φ fail to be M-ideals in L^Φ and l^Φ in the case of the Orlicz norm*, Boll. Un. Mat. Ital., to appear.

[32] S. Chen, H. Hudzik and A. Kamińska, *Support functionals and smooth points in Orlicz function spaces equipped with the Orlicz norm*, Math. Japon. 39 (1994), 271–279.

[33] S. Chen, H. Hudzik and H. Sun, *Complemented copies of l^1 in Orlicz spaces*, Math. Nachr. 159 (1992), 299–309.

[34] S. Chen, H. Hudzik and M. Wisła, *Geometry of the dual and higher order duals of Orlicz spaces*, to appear.

[35] S. Chen and B. Lin, *On strongly extreme points in Köthe–Bochner spaces*, to appear.

[36] S. Chen, B. Lin and X. Yu, *Rotund reflexive Orlicz spaces are fully convex*, in: Contemp. Math. 85, Amer. Math. Soc., 1989, 79–86.

[37] S. Chen, Y. Lu and B. Wang, *On property* (WM), $(CLUR)$ *and* (LKR) *of Orlicz sequence spaces*, Fasc. Math. 22 (1991), 19–25.

[38] S. Chen and Y. Shen, *Extreme points and rotundity of sequence Orlicz spaces*, Natur. Sci. J. Harbin Normal Univ. 1 (2) (1985), 1–6 (in Chinese).

[39] —, —, *Locally uniform rotundity of sequence Orlicz spaces*, ibid. 1 (2) (1985), 1–5 (in add.) (in Chinese).

[40] S. Chen and H. Sun, *On weak topology of Orlicz spaces*, Collect. Math. 44 (1993), 71–79.

[41] —, —, *On weak topology of sequence Orlicz spaces*, Adv. in Math. (China) 23 (1994), 469–471.

[42] —, —, *Weak convergence and weak compactness in abstract M spaces*, Proc. Amer. Math. Soc. 123 (1995), 1441–1447.

[43] —, —, *Reflexive Orlicz spaces have uniformly normal structure*, Studia Math. 109 (1994), 197–208.

[44] —, —, *λ-Properties of Orlicz sequence spaces*, Ann. Polon. Math. 59 (1994), 239–249.

[45] S. Chen, H. Sun and C. Wu, *λ-property of Orlicz spaces*, Bull. Polish Acad. Sci. Math. 39 (1991), 63–69.

[46] S. Chen and T. Wang, *Uniformly rotund points of Orlicz spaces*, Natur. Sci. J. Harbin Normal Univ. 8 (3) (1992), 5–10 (in Chinese).

[47] S. Chen and Y. Wang, *H property of Orlicz spaces*, Chinese Ann. Math. 8A (1987), 61–67 (in Chinese).

[48] —, —, *On definition of non-square normed spaces*, ibid. 9A (1988), 68–72 (in Chinese).

[49] —, —, *Locally uniform rotundity of Orlicz spaces*, J. Math. (Wuhan) 5 (1985), 9–14 (in Chinese).

[50] S. Chen and M. Wisła, *Extreme compact operators from Orlicz spaces to $C(\Omega)$*, Comment. Math. Univ. Carolin. 34 (1993), 63–77.

[51] S. Chen and X. Yu, *Smooth points of Orlicz spaces*, Comment. Math. 31 (1991), 39–47.

[52] Y. Cui, *Locally uniform k-rotundity of sequence Orlicz spaces*, to appear.

[53] —, *Mid point locally uniform rotundity of Orlicz spaces*, Nature J. 9 (1986), 230–231 (in Chinese).

[54] Y. Cui, *MLUR of sequence Musielak–Orlicz spaces*, Northeast. Math. J., to appear.
[55] —, *LUR of sequence Musielak–Orlicz spaces*, Chinese Ann. Math., to appear.
[56] —, *Coefficients of convexity on sequence Orlicz spaces* $l_{(M)}$, to appear.
[57] —, *K-M approximation in Orlicz spaces*, Chinese Appl. Math. J., to appear.
[58] —, *On Kantorovitch approximation operators*, Pure Appl. Math. (in Chinese), to appear.
[59] Y. Cui and T. Wang, *Strongly extreme points of Orlicz spaces*, J. Math. (Wuhan) 7 (4) (1987), 335–340 (in Chinese).
[60] —, —, *The roughness of the norms on Orlicz spaces*, Comment. Math. 31 (1991), 49–57.
[61] —, —, *Convexity of Orlicz spaces*, ibid. 31 (1991), 49–57.
[62] —, —, *Roughness of sequence Orlicz spaces*, J. Harbin Sci. Tech. Univ., to appear.
[63] Y. Cui and Y. Zhang, *K-smooth points and K-extreme points of sequence Orlicz spaces*, J. Baoji Teachers College, to appear.
[64] R. B. Darst and G. A. Deboth, *Two approximation properties and a Radon–Nikodym derivative for lattices of sets*, Indiana Univ. Math. J. 21 (1971), 355–362.
[65] R. G. Darst, D. A. Legg and D. W. Townsend, *Prediction in Orlicz spaces*, Manuscripta Math. 35 (1981), 91–103.
[66] M. Denker and H. Hudzik, *Uniformly non-$l_n^{(1)}$ Musielak–Orlicz sequence spaces*, Proc. Indian Acad. Sci. Math. Sci. 101 (1991), 71–86.
[67] M. Denker and R. Kombrink, *On B-convex Orlicz spaces*, in: Lecture Notes in Math. 79, Springer, 1979, 87–95.
[68] J. Diestel, *Geometry of Functional Analysis—Selected Topics*, Springer, 1975.
[69] —, *Sequences and Series in Banach Spaces*, Springer, 1984.
[70] J. Diestel and J. J. Uhl, Jr., *Vector Measures*, Math. Surveys 15, Amer. Math. Soc., 1977.
[71] M. Doman, *Weak uniform rotundity of Musielak–Orlicz spaces*, Comment. Math. Univ. Carolin. 32 (1991), 441–446.
[72] —, *Weak uniform rotundity of Orlicz sequence spaces*, Math. Nachr. 162 (1993), 145–151.
[73] P. N. Dowling and C. J. Lennard, *New fixed point free non-expansive maps in l_1 imply that every nonreflexive subspace of $L_1[0,1]$ fails fixed point property*, to appear.
[74] P. N. Dowling, C. J. Lennard and B. Turett, *Reflexivity and fixed point property for nonexpansive maps*, to appear.
[75] Y. Duan and S. Chen, *On best approximation operators in Orlicz spaces*, J. Math. Anal. Appl. 178 (1993), 1–8.
[76] D. V. Dulst and V. D. Valk, *(KK)-properties, normal structure and fixed points of nonexpansive mapping in Orlicz sequence spaces*, Canad. J. Math. 38 (1986), 728–750.
[77] R. Fleming, J. E. Jamison and A. Kamińska, *Isometries of Musielak–Orlicz spaces*, in: Proc. Conf. on Function Spaces, Edwardsville 1990, Lecture Notes Pure Appl. Math. 136, Marcel Dekker, 1992, 139–154.
[78] V. F. Gaposhkin, *On the existence of unconditional bases in Orlicz spaces*, Funktsional. Anal. i Prilozhen. 1 (4) (1967), 26–32 (in Russian).
[79] J. Globevnik, *On complex strict and uniform convexity*, Proc. Amer. Math. Soc. 47 (1975), 175–178.
[80] A. S. Granero, *λ-property in Orlicz spaces*, Bull. Polish Acad. Sci. Math. 37 (1989), 421–431.
[81] —, *Stable unit ball in Orlicz spaces*, Proc. Amer. Math. Soc. (in press).
[82] A. S. Granero and M. Wisła, *Closedness of the set of extreme points in Orlicz spaces*, Math. Nachr. 157 (1992), 319–334.
[83] R. Grząślewicz, *Extreme points in $C(K, L^{\varphi}(\mu))$*, Proc. Amer. Math. Soc. 98 (1986), 611–614.
[84] R. Grząślewicz and H. Hudzik, *Smooth points of Orlicz spaces equipped with the Luxemburg norm*, Math. Nachr., 155 (1992), 31–45; Erratum, ibid. 167 (1994), 330.

[85] R. Grząślewicz, H. Hudzik and W. Kurc, *Extreme and exposed points in Orlicz spaces*, Canad. J. Math. 44 (1992), 505–515.
[86] R. Grząślewicz, H. Hudzik and W. Orlicz, *Uniform non-l_n^1 property in some normed spaces*, Bull. Polish Acad. Sci. Math. 34 (1986), 161–171.
[87] M. He, *K-rotundity of sequence Orlicz spaces*, J. Qiqihar Normal College, to appear.
[88] F. L. Hernández, *Continuous functionals on a class of Orlicz spaces*, Houston J. Math. 11 (1985), 171–181.
[89] —, *A note on the Hahn–Banach approximation property in Orlicz spaces*, Ann. Sci. Math. Québec 9 (1985), 23–29.
[90] F. L. Hernández and V. Peirats, *Orlicz function spaces without complemented copies of l_p*, Israel J. Math. 56 (1986), 355–366.
[91] F. L. Hernández and B. Rodríguez-Salinas, *Remarks on the Orlicz function spaces $L^\varphi(0,\infty)$*, Math. Nachr. 156 (1992), 225–232.
[92] —, —, *On l_p-complemented copies in Orlicz spaces*, Israel J. Math. 62 (1988), 37–55.
[93] —, —, *On l_p-complemented copies in Orlicz spaces II*, ibid. 68 (1989), 27–55.
[94] F. L. Hernández and C. Ruiz, *On Musielak–Orlicz spaces isomorphic to Orlicz spaces*, Comment. Math. 32 (1992), 55–60.
[95] —, —, *Universal classes of Orlicz function spaces*, Pacific J. Math. 155 (1992), 87–98.
[96] R. B. Holmes, *Geometric Functional Analysis and its Applications*, Springer, 1975.
[97] J. Hu, *An embedding problem in Orlicz sequence spaces*, Natur. Sci. J. Xiangtan Univ. 1985 (2), 56–61 (in Chinese).
[98] Z. Hu and B. L. Lin, *Strongly exposed points in Lebesgue–Bochner function spaces*, Proc. Amer. Math. Soc. 120 (1994), 1159–1165.
[99] H. Hudzik, *Locally uniformly non-$l_n^{(1)}$ Orlicz spaces*, Suppl. Rend. Circ. Mat. Palermo 10 (1985), 49–56.
[100] —, *Uniformly non-$l_n^{(1)}$ Orlicz spaces with Luxemburg norm*, Studia Math. 81 (1985), 271–284.
[101] —, *Orlicz spaces containing a copy of l_1*, Math. Japon. 34 (1989), 747–759.
[102] —, *On some equivalent conditions in Musielak–Orlicz spaces*, Comment. Math. 24 (1984), 57–64.
[103] —, *Strict convexity of Musielak–Orlicz spaces with Luxemburg's norm*, Bull. Acad. Polon. Sci. Sér. Sci. Math. 29 (1981), 235–247.
[104] —, *Convexity in Musielak–Orlicz spaces*, Hokkaido Math. J. 14 (1985), 85–96.
[105] —, *Uniform convexity of Musielak–Orlicz spaces with Luxemburg's norm*, Comment. Math. 24 (1984), 57–64.
[106] —, *A criterion of uniform convexity of Musielak–Orlicz spaces with Luxemburg norm*, Bull. Polish Acad. Sci. Math. 32 (1984), 303–313.
[107] —, *Musielak–Orlicz spaces isomorphic to strictly convex spaces*, ibid. 29 (1981), 465–470.
[108] —, *Flat Musielak–Orlicz spaces under Luxemburg's norm*, ibid. 32 (1984), 203–208.
[109] —, *Some class of uniformly non-square Orlicz–Bochner spaces*, Comment. Math. Univ. Carolin. 26 (1985), 269–274.
[110] —, *Lower and upper estimations of the modulus of convexity in some Orlicz spaces*, Arch. Math. (Basel) 57 (1991), 80–87.
[111] —, *Orlicz spaces without strongly extreme points and without H-points*, Canad. Math. Bull. 36 (1993), 173–177.
[112] —, *On some renorming problems*, Arch. Math. (Basel) 48 (1987), 505–510.
[113] —, *An estimation of the modulus of convexity in a class of Orlicz spaces*, Math. Japon. 32 (1987), 227–237.
[114] —, *On some renorming problems*, Arch. Math. (Basel) 52 (1989), 365–366.
[115] —, *On smallest and largest Orlicz spaces*, Math. Nachr. 141 (1989), 109–115.

[116] H. Hudzik, *Every nonreflexive Banach lattice has the packing constant equal to* $1/2$, Collect. Math. 44 (1993), 129–134.

[117] H. Hudzik and A. Kamińska, *On uniformly convexifiable and B-convex Musielak–Orlicz spaces*, Comment. Math. 25 (1985), 59–75.

[118] H. Hudzik, A. Kamińska and W. Kurc, *Uniformly non-l_n^1 Musielak–Orlicz spaces*, Bull. Polish Acad. Sci. Math. 35 (1987), 411–448.

[119] H. Hudzik, A. Kamińska and J. Musielak, *On the convexity coefficient of Orlicz spaces*, Math. Z. 197 (1988), 291–295.

[120] H. Hudzik and W. Kurc, *Strict monotonicity and uniform monotonicity of Orlicz spaces equipped with the Orlicz norm*, to appear.

[121] H. Hudzik, W. Kurc and M. Wisła, *Strongly extreme points in Orlicz function spaces*, J. Math. Anal. Appl. 189 (1995), 651–670.

[122] H. Hudzik and T. Landes, *Characteristic of convexity of Musielak–Orlicz function spaces equipped with the Luxemburg norm*, Comment. Math. Univ. Carolin. 33 (1992), 615–621.

[123] —, —, *Packing constant in Orlicz spaces equipped with the Luxemburg norm*, Boll. Un. Mat. Ital. A (7) 9 (1995), 225–237.

[124] H. Hudzik and M. Mastyło, *Almost isometric copies of l_∞ in some Banach spaces*, Proc. Amer. Math. Soc. 119 (1993), 209–215.

[125] —, —, *Strongly extreme points in Köthe–Bochner spaces*, Rocky Mountain J. Math. 23 (1993), 899–909.

[126] H. Hudzik and D. Pallaschke, *On some convexity properties of Orlicz sequence spaces equipped with the Luxemburg norm*, Math. Nachr., to appear.

[127] H. Hudzik, T. Wang and B. Wang, *On the convexity characteristic of Orlicz spaces*, Math. Japon. 37 (1992), 691–699.

[128] H. Hudzik and M. Wisła, *On extreme points of Orlicz spaces with Orlicz norm*, Collect. Math. 44 (1993), 135–146.

[129] —, —, *On strongly exposed points in Orlicz spaces*, to appear.

[130] H. Hudzik, C. Wu and Y. Ye, *Packing constant in Musielak–Orlicz sequence spaces equipped with the Luxemburg norm*, Rev. Mat. Univ. Complut. Madrid 7 (1994), 13–26.

[131] H. Hudzik and Y. Ye, *Support functionals and smoothness in Musielak–Orlicz sequence spaces endowed with the Luxemburg norm*, Comment. Math. Univ. Carolin. 31 (1990), 661–684; Correction, ibid. 35 (1994), 209.

[132] H. Hudzik and Z. Zbąszyniak, *Smooth points of Musielak–Orlicz sequence spaces equipped with the Luxemburg norm*, Colloq. Math. 65 (1993), 157–164; Erratum, ibid. 66 (1994), 335.

[133] J. E. Jamison, A. Kamińska and P.-K. Lin, *Isometries of Orlicz spaces of vector valued functions*, Math. Z. 193 (1986), 363–371.

[134] N. J. Kalton, *Orlicz sequence spaces without local convexity*, Math. Proc. Cambridge Philos. Soc. 81 (1977), 253–277.

[135] —, *Minimal and strongly minimal Orlicz sequence spaces*, to appear.

[136] A. Kamińska, *On uniform convexity of Orlicz spaces*, Indag. Math. A85 (1982), 27–36.

[137] —, *The criteria for local uniform rotundity of Orlicz spaces*, Studia Math. 74 (1984), 201–215.

[138] —, *On some convexity properties of Musielak–Orlicz spaces*, Suppl. Rend. Circ. Mat. Palermo 2 (1984), 63–72.

[139] —, *Uniform rotundity in every direction of sequence Orlicz spaces*, Bull. Polish Acad. Sci. Math. 32 (1984), 589–594.

[140] —, *Flat Orlicz–Musielak sequence spaces*, ibid. 30 (1982), 347–352.

[141] —, *Rotundity of sequence Musielak–Orlicz spaces*, ibid. 29 (1981), 137–144.

[142] —, *On some compactness criteria for Orlicz subspace $E_\varphi(\Omega)$*, Comment. Math. 22 (1981), 245–255.

[143] A. Kamińska, *Strict convexity of sequence Musielak–Orlicz spaces with Orlicz norm*, J. Funct. Anal. 50 (1993), 285–305.
[144] —, *Some remarks on Orlicz–Lorentz spaces*, Math. Nachr. 147 (1990), 29–38.
[145] —, *Extreme points in Orlicz–Lorentz spaces*, Arch. Math. (Basel) 55 (1990), 173–180.
[146] A. Kamińska, P.-K. Lin and H. Sun, *Uniformly normal structure of Orlicz–Lorentz spaces*, in: Proc. Conference in Functional Analysis, Harmonic Analysis and Probability, preprint.
[147] A. Kamińska and W. Kurc, *Weak uniform rotundity in Orlicz spaces*, Comment. Math. Univ. Carolin. 27 (1986), 651–664.
[148] A. Kamińska and B. Turett, *Type and cotype in Musielak–Orlicz spaces*, in: London Math. Soc. Lecture Note Ser. 158, Cambridge Univ. Press, 1990, 165–180.
[149] M. A. Khamsi, W. M. Kozłowski and S. Chen, *Some geometrical properties and fixed point theorems in Orlicz spaces*, J. Math. Anal. Appl. 155 (1991), 393–412.
[150] S. J. Kilmer, W. M. Kozłowski and G. Lewicki, *Best approximants in modular spaces*, J. Approx. Theory 63 (1990), 338–367.
[151] —, —, —, *Sigma order continuity and best approximation in L_ϕ-spaces*, Comment. Math. Univ. Carolin. 32 (1991), 241–250.
[152] A. Kozek, *Orlicz spaces of functions with values in Banach spaces*, ibid. 19 (1977), 259-288.
[153] W. Kozłowski, *Modular Function Spaces*, Marcel Dekker, New York and Basel, 1988.
[154] M. A. Krasnosel'skiĭ and Ya. B. Rutickiĭ, *Convex Functions and Orlicz spaces*, Noordhoff, Groningen, 1961.
[155] W. Kurc, *Strongly exposed points in Orlicz spaces of vector-valued functions*, Comment. Math. 27 (1987), 121–133.
[156] —, *Extreme points of the unit ball in Orlicz spaces of vector-valued fuctions with the Amemiya norm*, Math. Japon. 38 (1993), 277–288.
[157] —, *Strictly and uniformly monotone Musielak–Orlicz spaces and applications to best approximation*, J. Approx. Theory 69 (1992), 173–187.
[158] T. Landes, *Normal structure and weakly normal structure of Orlicz sequence spaces*, Trans. Amer. Math. Soc. 285 (1984), 523–534.
[159] T. Landes and L. Rogge, *Best approximants in L_φ-spaces*, Z. Wahrsch. Verw. Gebiete 51 (1980), 251–237.
[160] —, —, *Characterization of p-predictors*, Proc. Amer. Math. Soc. 76 (1979), 307–309.
[161] —, —, *A characterization of best φ-approximants*, Trans. Amer. Math. Soc. 267 (1981), 259–264.
[162] B. Lao and X. Zhu, *Extreme points of Orlicz spaces*, J. Zhongshan Univ. 1983 (2), 97–103 (in Chinese).
[163] H. Li, *On smooth modulars of Orlicz spaces and applications*, J. Jiangxi Inst. Tech. 1981 (2), 11–20 (in Chinese).
[164] R. Li, *General representation theorem of bounded linear functionals in Orlicz spaces*, J. Harbin Inst. Tech. 12 (3) (1980), 91–94 (in Chinese).
[165] Y. Li, *Weakly uniformly rotundity of sequence Orlicz spaces*, Nature J. 9 (1986), 471–472 (in Chinese).
[166] Y. Liang, *On smooth set of sequence Orlicz spaces*, Natur. Sci. J. Harbin Normal Univ. 7 (3) (1991), 8–15 (in Chinese).
[167] K. J. Lindberg, *On subspaces of Orlicz sequence spaces*, Studia Math. 45 (1973), 119–146.
[168] B.-L. Lin and P.-K. Lin, *Property (H) in Lebesgue–Bochner function spaces*, Proc. Amer. Math. Soc. 95 (1985), 581–584.
[169] P.-K. Lin, *k-Uniform rotundity of Lorentz–Orlicz spaces*, to appear.
[170] P.-K. Lin and H. Sun, *Some geometric properties of Orlicz-Lorentz spaces*, Arch. Math. (Basel) 64 (1995), 500–511.

[171] P.-K. Lin and H. Sun, *Normal structure of Lorentz-Orlicz spaces*, preprint.
[172] J. Lindenstrauss and L. Tzafriri, *Classical Banach Spaces I*, Springer, 1977.
[173] —, —, *On Orlicz sequence spaces, I*, Israel J. Math. 10 (1971) 379–390.
[174] —, —, *On Orlicz sequence spaces, II*, ibid. 11 (1972), 355–379.
[175] J. Lindenstrauss and L. Tzafriri, *On Orlicz sequence spaces, III*, ibid. 14 (1973), 368–389.
[176] H. Liu, *A study on vector-valued Orlicz spaces*, J. Harbin Inst. Tech. (Math. Issue) 1984, 70–78 (in Chinese).
[177] G. Lumer, *On the isometries of reflexive Orlicz spaces*, Ann. Inst. Fourier (Grenoble) 13 (1963), 99–109.
[178] W. A. J. Luxemburg, *Banach Function Spaces*, Thesis, Delft, 1955.
[179] R. P. Maleev and S. L. Troyanski, *On the moduli of convexity and smoothness in Orlicz spaces*, Studia Math. 54 (1975), 131–141.
[180] —, —, *Smooth norms in Orlicz spaces*, Canad. Math. Bull. 34 (1991), 74–82.
[181] H. W. Milnes, *Convexity of Orlicz spaces*, Pacific J. Math. 7 (1957), 1451–1486.
[182] J. Musielak, *Orlicz Spaces and Modular Spaces*, Lecture Notes in Math. 1034, Springer, 1983.
[183] N. I. Niesen, *On the Orlicz function spaces* $L_M(0,\infty)$, Israel J. Math. 20 (1975), 237–259.
[184] M. Nowak, *Singular linear functionals on non-locally convex Orlicz spaces*, Indag. Math. 3 (1992), 337–351.
[185] A. J. Pach, M. A. Smith and B. Turett, *Flat Orlicz spaces*, Proc. Amer. Math. Soc. 81 (1981), 528–530.
[186] R. Phelps, *Convex Functions, Monotone Operators and Differentiability*, Lecture Notes in Math. 1364, Springer, 1989.
[187] R. Płuciennik, *On some criteria for compactness of sets in space* E_{ps}, Comment. Math. 21 (1979), 207–217.
[188] —, *On some properties of the superposition operator in generalized Orlicz spaces of vector-valued functions*, ibid. 25 (1985), 133–149.
[189] —, *Some remarks on compactness in Musielak–Orlicz spaces of vector-valued functions*, Fasc. Math. 18 (1986), 11–17.
[190] —, *Representation of additive functionals on Musielak–Orlicz spaces of vector-valued functions*, Kodai Math. J. 10 (1987), 49–54.
[191] —, *Boundedness of the superposition operator in generalized Orlicz spaces of vector-valued functions*, Bull. Polish Acad. Sci. Math. 33 (1985), 531–540.
[192] —, *On* E_N*-weak convergence and* E_N*-weak continuity in Orlicz spaces of vector valued functions*, Fasc. Math. 13 (1981), 5–13.
[193] R. Płuciennik, T. Wang and Y. Zhang, H*-points and denting points in Orlicz spaces*, Comment. Math. 33 (1993), 135–151.
[194] R. Płuciennik and M. Wisła, *Linear functionals on some non-locally convex generalized Orlicz spaces*, Comment. Math. Univ. Carolin. 29 (1988), 103–116.
[195] R. Płuciennik and Y. Ye, *Differentiability of Musielak–Orlicz spaces*, ibid. 30 (1989), 699–711.
[196] A. M. Olevskiĭ, *Fourier series and Lebesgue functions*, Uspekhi Mat. Nauk 22 (3) (1967), 237–239 (in Russian).
[197] M. M. Rao and Z. Ren, *Theory of Orlicz Spaces*, Marcel Dekker, New York, 1991.
[198] Z. Ren, *Weakly sequentially compact embedding theorems of Orlicz spaces*, Nature J. 9 (1986), 313–314 (in Chinese).
[199] —, *Reflexive Orlicz spaces and J. L. Lions' lemma*, Chinese Sci. Bull. 31 (1986), 1474–1475 (in Chinese).
[200] —, *On some theorems involving comparison of Orlicz spaces*, Natur. Sci. J. Xiangtan Univ. 1986 (2), 22–31 (in Chinese).

[201] Z. Ren, *On modulars and norms in Orlicz spaces*, Adv. in Math. (China) 15 (1986), 315–320 (in Chinese).

[202] —, *Packing in Orlicz function spaces*, Ph.D. Dissertation, Univ. of California, Riverside, 1993.

[203] —, *Packing spheres in Orlicz function spaces with Luxemburg norm*, Natur. Sci. J. Xiangtan Univ. 1985 (1), 51–60 (in Chinese).

[204] Z. Ren and S. Chen, *Jung constants of Orlicz function spaces*, to appear.

[205] Z. Ren and T. Wang, *Reflexivity and ball-packing constants*, to appear.

[206] S. Rolewicz, *Metric Linear Spaces*, Polish Sci. Publ., Warszawa, 1984.

[207] E. M. Semenov, *A method for establishing interpolation theorems in symmetric spaces*, Dokl. Akad. Nauk SSSR 185 (1969), 1243–1246 (in Russian).

[208] Z. Shi, *K-uniform rotundity of Orlicz spaces*, J. Heilongjiang Univ. Natur. Sci. 4 (2) (1987), 41–44 (in Chinese).

[209] Z. Shi and Y. Fan, *Locally uniform k-rotundity of Orlicz spaces*, to appear.

[210] H. Sun and S. Chen, *Stable points of Orlicz spaces with Orlicz norm*, J. Harbin Inst. Tech. Add. 1991, 134–135 (in Chinese).

[211] K. Sundaresan, *Uniformly non-square Orlicz spaces*, Nieuw. Arch. Wisk. 14 (1966), 31–39.

[212] —, *Orlicz spaces isomorphic to strictly convex spaces*, Proc. Amer. Math. Soc. 17 (1966), 1353–1356.

[213] L. Tao, *Rotundity of sequence Orlicz spaces*, Natur. Sci. J. Harbin Normal Univ. 2 (1) (1986), 11–15 (in Chinese).

[214] —, *Smoothness of Orlicz sequence spaces*, ibid. 4 (1) (1988), 13–18 (in Chinese).

[215] B. Turett, *Rotundity of Orlicz spaces*, Indag. Math. A79 (1976), 462–468.

[216] B. Wang, *Exposed points of Orlicz spaces*, J. Baoji Teachers College 12 (2) (1989), 43–49 (in Chinese).

[217] —, *Strongly exposed property of Orlicz spaces*, to appear.

[218] B. Wang and T. Wang, *(KK), (UKK) and (weak) sum properties of direct sums of Orlicz spaces*, J. Harbin Univ. Sci. Tech. 14 (1) (1990), 66–73 (in Chinese).

[219] B. Wang and Y. Zhang, *The smooth points of Orlicz sequence spaces*, Natur. Sci. J. Harbin Normal Univ. 7 (3) (1991), 18–22 (in Chinese).

[220] T. Wang, *Property (G) and (K) of Orlicz spaces*, Comment. Math. Univ. Carolin. 31 (1990), 307–313.

[221] —, *Girth and reflexivity of Orlicz sequence spaces*, Chinese Ann. Math. 6A (1985), 579–586 (in Chinese).

[222] —, *P-convexity of Orlicz spaces*, Chinese Quart. J. Math. 7 (1992), 18–21 (in Chinese).

[223] —, *Ball-packing constants of sequence Orlicz spaces*, Chinese Ann. Math. 8A (1987), 508–513 (in Chinese).

[224] —, *Uniformly convex condition of sequence Orlicz spaces*, J. Harbin Univ. Sci. Tech. 7 (2) (1983), 1–8 (in Chinese).

[225] —, *Uniform non-l_n^1 property of Orlicz spaces*, J. Math. Res. Exposition 5 (1985), 125–126 (in Chinese).

[226] —, *Constant d_n on sequence Orlicz spaces*, Pure Appl. Math. 3 (1987), 31–38 (in Chinese).

[227] T. Wang and S. Chen, *K-rotundity of Orlicz spaces*, Natur. Sci. J. Harbin Normal Univ. 1 (4) (1985), 11–15 (in Chinese).

[228] —, —, *K-rotundity of sequence Orlicz spaces*, Canad. Math. Bull. 34 (1991), 128–135.

[229] —, —, *Smoothness and differentiability of Orlicz spaces*, Chinese J. Engrg. Math. 1 (1987), 113–115 (in Chinese).

[230] T. Wang and Y. Cui, *KUR points of Orlicz spaces*, to appear.

[231] —, —, *Coefficients of weakly convergent sequence in Orlicz sequence spaces*, to appear.

[232] T. Wang, Y. Cui and D. Ji, *Characterization of Orlicz spaces with Mazur's intersection property*, Funct. Approx. Comment. Math. 23 (1994), 69–76.
[233] T. Wang, Y. Cui and Y. Li, *Packing constants and strongly extreme points in Orlicz spaces*, Adv. in Math. (China) 15 (2) (1986), 217–218.
[234] T. Wang, Y. Cui and Q. Wang, *Coefficients of roughness of Orlicz spaces*, to appear.
[235] T. Wang and D. Ji, *The criterion of Orlicz spaces to be U-spaces*, to appear.
[236] T. Wang, D. Ji and Y. Li, *Prediction operator in Orlicz spaces*, Chinese Sci. Bull. 40 (1995), 1592–1595.
[237] T. Wang, D. Ji and Z. Shi, *The criteria of strongly exposed points in Orlicz spaces*, Comment. Math. Univ. Carolin. 35 (1994), 721–734.
[238] T. Wang, Y. Li and Y. Zhang, *UR points and WUR points of sequence Orlicz spaces*, Southeast Asian Bull. Math., in press.
[239] T. Wang and Y. Liu, *Packing constant of a type of sequence spaces*, Comment. Math. 30 (1990), 197–203.
[240] T. Wang, Z. Ren and Y. Zhang, *UR points and WUR points of Orlicz spaces*, J. Math. (Wuhan) 13 (1993), 443–452.
[241] T. Wang and Z. Shi, *On the uniformly normal structure of Orlicz spaces with Orlicz norm*, Comment. Math. Univ. Carolin. 34 (1993), 433–442.
[242] —, —, *Some notes on structure of Orlicz spaces*, to appear.
[243] —, —, *Criteria for KUC, NUC and UKK of Orlicz spaces*, Northeast. Math. J. 3 (1987), 160–172 (in Chinese).
[244] —, —, *KUR of sequence Orlicz spaces*, Southeast Asian Bull. Math. 14 (1990), 33–44.
[245] —, —, *Uniform rotundity in weakly compact directions of Orlicz spaces*, J. Harbin Univ. Sci. Tech. (in Chinese), to appear.
[246] —, —, *Some notes on Orlicz spaces*, Fasc. Math. 24 (1993), 5–11.
[247] —, —, *LW^*UR of Orlicz spaces*, J. Heilongjiang Univ. Natur. Sci. (in Chinese), to appear.
[248] —, —, *URED of sequence Orlicz spaces*, Acta Sci. Math. (Szeged), to appear.
[249] T. Wang, Z. Shi and Y. Cui, *Uniform rotundity in every direction of Orlicz spaces*, Comment. Math., to appear.
[250] T. Wang, Z. Shi and Y. Li, *On uniformly nonsquare points and nonsquare points of Orlicz spaces*, Comment. Math. Univ. Carolin. 33 (1992), 477–484.
[251] T. Wang, Z. Shi and Q. Wang, *On W^*UR points and VR point of Orlicz spaces with Orlicz norm*, Collect. Math. 44 (1993), 279–299.
[252] T. Wang and B. Wang, *Normal structure, sum-property and LD property of sequence Orlicz spaces*, J. Math. Res. Exposition, to appear.
[253] —, —, *The (weakly) normal structure and LD property of Orlicz sequence spaces*, J. Math. (Wuhan) 14 (1994), 339–345 (in Chinese).
[254] —, —, *Strongly (very) smooth points of Orlicz spaces*, Northeast. Math. J. 8 (1992), 223–230 (in Chinese).
[255] T. Wang and Q. Wang, *On the weak star uniformly rotund points of Orlicz spaces*, Collect. Math. 44 (1993), 301–306.
[256] —, —, *Some notes on k_x for Orlicz spaces*, Chinese J. Engrg. Math. 14 (1994), 7–14 (in Chinese).
[257] T. Wang and Y. Wang, *Minimum Orlicz norm control for distributed parameter systems*, Acta Math. Phys. (Chinese) 10 (1990), 273 (in Chinese).
[258] T. Wang, Y. Wang and Y. Li, *Weakly uniform convexity of Orlicz spaces*, J. Math. (Wuhan) 6 (1986), 209–214 (in Chinese).
[259] T. Wang, Y. Wu and Y. Zhang, *W^*-uniform rotundity of Orlicz spaces*, J. Heilongjiang Univ. Natur. Sci. 9 (1) (1992), 10–16 (in Chinese).
[260] T. Wang and Y. Zhang, *Coefficients of convexity on Orlicz spaces*, J. Harbin Univ. Sci. Tech. 15 (4) (1991), 70–78 (in Chinese).

[261] T. Wang and Y. Zhang, *l_N-Weak compactness of sequence Orlicz spaces*, J. Harbin Univ. Sci. Tech. 16 (3) (1992), 1–6 (in Chinese).

[262] T. Wang, Y. Zhang and B. Wang, *Fully k-convexity of Orlicz spaces*, Natur. Sci. J. Harbin Normal Univ. 5 (3) (1989), 19–21 (in Chinese).

[263] Y. Wang, *Limits of sequences of predictors in Banach spaces*, J. Harbin Univ. Sci. Tech. 5 (1) (1981), 18–26 (in Chinese).

[264] —, *Weakly sequential completeness of Orlicz spaces*, Northeast. Math. J. 1 (1985), 241–246.

[265] —, *Uniform non-squareness and flatness in Orlicz spaces*, J. Math. Res. Exposition 4 (1984), 94 (in Chinese).

[266] Y. Wang and S. Chen, *Approximation operators in Orlicz spaces*, Pure Appl. Math. 1 (1986), 44–51 (in Chinese).

[267] Y. Wang and S. Chen, *An optimal control problem in Orlicz spaces*, Chinese J. Engrg. Math. 3 (1986), 137–141 (in Chinese).

[268] —, —, *Non-squareness, flatness and B-convexity of Orlicz spaces*, Comment. Math. 28 (1988), 159–169.

[269] Z. Wang, *Extreme points of sequence Orlicz spaces*, J. Daqing Oil Inst. 7 (1) (1983), 112–121 (in Chinese).

[270] M. Wisła, *Extreme points and stable unit balls in Orlicz sequence spaces*, Arch. Math. (Basel) 56 (1991), 482–490.

[271] —, *A full description of extreme points in $C(\Omega, L^{\varphi}(\mu))$*, Proc. Amer. Math. Soc. 113 (1991), 193–200.

[272] —, *On completeness of Musielak–Orlicz spaces*, Chinese Ann. Math. 10B (3) (1989), 292–299.

[273] —, *Some remarks on the Kozek condition (B)*, Bull. Polish Acad. Sci. Math. 32 (1984), 407–415.

[274] —, *Continuity of the identity embedding of some Orlicz spaces I*, Comment. Math. 24 (1984), 171–184.

[275] —, *Continuity of the identity embedding of some Orlicz spaces II*, Bull. Polish Acad. Sci. Math. 31 (1983), 143–150.

[276] —, *Convergence in Musielak–Orlicz spaces*, ibid. 33 (1985), 517–529.

[277] —, *Boundedness of the identity embedding of some Musielak–Orlicz spaces*, Comment. Math. 27 (1988), 359–371.

[278] —, *Stable points of unit ball in Orlicz spaces*, Comment. Math. Univ. Carolin. 32 (1991), 501–515.

[279] —, *Strongly extreme points in Orlicz sequence spaces*, to appear.

[280] W. Wnuk, *Orlicz spaces cannot be renormed analogously to L^p-spaces*, Indag. Math. 46 (1984), 357–359.

[281] C. Wu and S. Chen, *Extreme points and rotundity of Musielak–Orlicz spaces*, Northeast. Math. J. 2 (1986), 138–149.

[282] —, —, *Extreme points and rotundity of sequence Musielak–Orlicz spaces*, J. Math. Res. Exposition 8 (1988), 195–200.

[283] C. Wu, S. Chen and Y. Wang, *H property of sequence Orlicz spaces*, J. Harbin Inst. Tech. Math. issue 1985, 6–11 (in Chinese).

[284] —, —, —, *Geometric characterization of reflexivity and flatness of sequence Orlicz spaces*, Northeast. Math. J. 2 (1986), 49–57 (in Chinese).

[285] C. Wu and H. Sun, *On the λ-property of Orlicz space L_M*, Comment. Math. Univ. Carolin. 31 (1991), 731–741.

[286] —, —, *Norm calculation and complex convexity of the Musielak–Orlicz sequence space*, Chinese Ann. Math. 12A (1991), suppl., 98–102 (in Chinese).

[287] —, —, *On complex extreme points and complex convexity of Musielak–Orlicz spaces*, J. Systems Sci. Math. Sci. 7 (1) (1987), 7–13 (in Chinese).

[288] C. Wu and H. Sun, *On the complex convexity of Orlicz–Musielak sequence spaces*, Comment. Math. 28 (1989), 397–408.

[289] —, —, *On the complex convexity of Orlicz spaces* $L_M^*(X)$, J. Harbin Inst. Tech. 20 (1) (1988), 101–102 (in Chinese).

[290] —, —, *On complex uniform convexity of Musielak–Orlicz spaces*, Northeast. Math. J. 4 (1988), 389–396 (in Chinese).

[291] C. Wu and T. Wang, *Orlicz Spaces and Applications*, Heilongjiang Sci. & Tech. Press, 1983 (in Chinese).

[292] —, —, *Research of Orlicz spaces in China*, Southeast Asian Math. Bull. 14 (2) (1990), 75–85.

[293] —, —, *Advances on research of Orlicz spaces* (I), J. Math. Res. Exposition 6 (1986), 155–161 (in Chinese).

[294] —, —, *Advances on research of Orlicz spaces* (II), ibid. 6 (1986), 143–148 (in Chinese).

[295] C. Wu, T. Wang, S. Chen and Y. Wang, *Theory of Geometry of Orlicz Spaces*, Harbin Inst. of Tech. Press, 1986 (in Chinese).

[296] C. Wu, S. Zhao and J. Chen, *On calculation of Orlicz norm and rotundity of Orlicz spaces*, J. Harbin Inst. Tech. 10 (2) (1978), 1–12 (in Chinese).

[297] Y. Wu, *Sequential compactness and weak convergence of Orlicz spaces*, Nature J. 5 (1982), 234 (in Chinese).

[298] —, *Continuous linear functionals on generalized Orlicz spaces*, J. Heilongjiang Univ. Natur. Sci. 6 (3) (1989), 14–17 (in Chinese).

[299] Y. Wu and T. Wang, *Convergence on the unit sphere of Orlicz spaces*, ibid. 5 (4) (1988), 1–4 (in Chinese).

[300] H. Ye, *Sequential compactness condition of Orlicz spaces*, J. Chinese Univ. Sci. Tech. 13 (1983), 399–400 (in Chinese).

[301] Y. Ye, *Ball packing values of sequence Orlicz spaces*, Chinese Ann. Math. 4A (1983), 487–493 (in Chinese).

[302] —, *Geometric equivalence condition for reflexivity of sequence Orlicz spaces*, Northeast. Math. J. 2 (1986), 309–323 (in Chinese).

[303] —, *Differentiability and gradient of sequence Orlicz spaces*, J. Harbin Univ. Sci. Tech. 11 (2) (1987), 114–118 (in Chinese).

[304] Y. Ye, N. He and R. Płuciennik, *P-convexity of Orlicz spaces with Luxemburg norm*, Comment. Math. 31 (1991), 203–216.

[305] X. Yu, *Theory of Geometry of Banach Spaces*, East China Normal Univ. Press, 1986 (in Chinese).

[306] Z. Zbąszyniak, *Smooth points of the unit sphere in Musielak–Orlicz function spaces equipped with the Luxemburg norm*, Comment. Math. Univ. Carolin. 35 (1994), 95–102.

[307] Y. Zhang, T. Wang and B. Wang, *Stability of sequence Musielak–Orlicz spaces*, J. Daqing Oil Inst. 14 (1990), 96–101 (in Chinese).

Index